THE PENTAGON

A Mathematics Magazine for Students

Volume 49 Number 1 Fall 1989

CONTENTS

The Pentagon (ISSN 0031-4870) is published semiannually in December and May by Kappa Mu Epsilon. Manuscripts of interest to undergraduate mathematics majors and first year graduate mathematics students are welcome, particularly those written by students. Submissions should be typewritten (double spaced with wide margins) on white paper, standard notation conventions should be respected and special symbols should be carefully inserted by hand in black ink. All illustrations must be submitted on separate sheets and drawn in black ink. Computer programs, although best represented by pseudocode in the main text, may be included as an appendix. Graphs, tables or other materials taken from copyrighted works MUST be accompanied by an appropriate release from the copyright holder permitting further reproduction. Student authors should include the names and addresses of their faculty advisors. Contributors to *The Problem Corner*, *The Hexagon* or *Kappa Mu Epsilon News* are invited to correspond directly with the appropriate Associate Editor. Electronic mail may be sent to (Bitnet) PENTAGON@LIUVAX.

The subscription price is $5.00 (US) for four issues (two years); foreign addresses require an additional $2 for postage. Libraries may arrange for a continuing subscription at $2.50 per year. A limited selection of back numbers is available at $1.25 per copy. Correspondence regarding subscriptions, change of address or back copies should be addressed to the Business Manager. Copies lost because of failure to notify the Business Manager of change of address cannot be replaced.

The Rain, I Claim, Falls Mainly on the Brain

Kevin Chartier, *student*

Kansas Delta

Washburn University
Topeka, Kansas 66621

Presented at the 1989 National Convention and
awarded FIRST PLACE by the Awards Committee.

Introduction.

At what speed should one run to stay the driest in a rainstorm? This is an interesting question which leads to a very interesting mathematical modeling problem. Most people would probably expect the solution to be "run as fast as you can." Well, maybe that's right, maybe it's not. Let us investigate. As in any modeling problem, the solution to the problem depends completely on the mathematical assumptions that are made when converting from the physical real world problem to the mathematical modeling problem. The assumptions made must reasonably reflect the physical situation, yet must be sufficiently restrictive to permit a mathematical solution. The assumptions I have chosen are:

(1) The path from P to Q is a horizontal line.

(2) The runner moves at the same speed all the way from P to Q.

(3) The body shape is a parallelepiped.

(4) The wind speed and direction are constant with the wind blowing in the direction of the path from P to Q.

(5) The rain is falling at a constant intensity along the path from P to Q.

(6) The rain is falling in a straight line path at a constant velocity as it nears the ground. Thus the horizontal component of that velocity is the wind speed. The vertical component is assumed to be the limiting velocity of a raindrop of constant mass, as it falls to the earth drawn by gravity with an air resistance inversely proportional to the velocity.

I will use the following notations (see Figure One) for the various constants in this modeling problem:

w	wind velocity (feet per second)
r	downward limiting velocity of rainfall (feet per second)
D_s	length of side of runner (feet)
D_b	length of back of runner (feet)
D_h	height of runner (feet)
i	intensity of rainfall (feet per second)
d	straight line distance from P to Q (feet)
v_{max}	maximum velocity of which runner is capable

The Modeling Problem.

There are several meaningful ways to measure how wet our runner gets while moving from point P to Q. I choose to measure wetness in terms of the total volume of rain that hits the runner. Accordingly, I introduce the function $A(v)$ = total volume of rain that hits the runner as he moves from P to Q at velocity v, where $0 \leq v \leq v_{max}$. My objectives can now be stated precisely: Part I – construct the function $A(v)$ subject to the assumptions state previously and Part II – minimize the function $A(v)$ in the interval $0 \leq v \leq v_{max}$.

Part I.

I will first decompose $A(v)$ into two separate functions:

$$A(v) = A_T(v) + A_B(v)$$

where $A_T(v)$ is the volume of rain that hits only the top of the runner's head and $A_B(v)$ is the volume of rain that hits the remaining part of the runner's body.

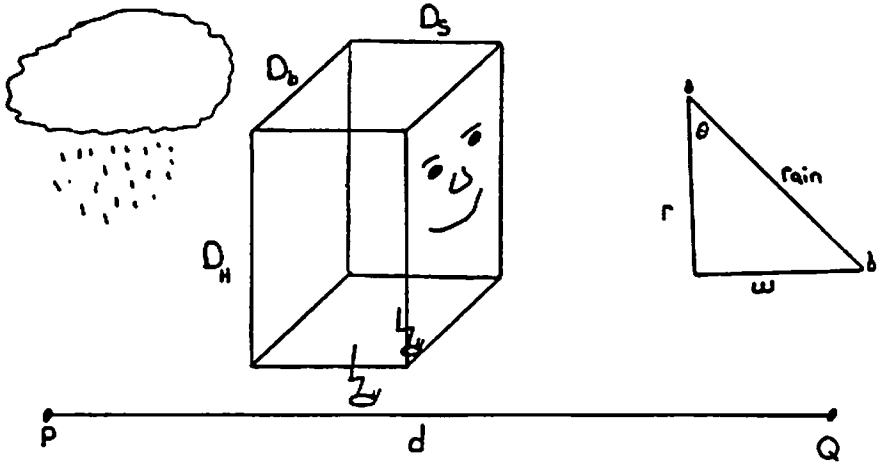

Figure One

First I will construct $A_T(v)$. To accomplish this I will first consider a special case. What is the volume of water that hits the top of the head if our runner stands still for t seconds? In this case it is clear that the accumulated volume = (area of top of head) · (depth of rain per second) · (time in seconds) and so

$$A_T(v) = (D_s \cdot D_b) \cdot (i) \cdot (t).$$

Now we consider the general case with our rectangular runner moving from P to Q for t seconds, rather than standing still. The volume of water landing on the top of the head is certainly unchanged from the special case given above. Also, when running at a constant velocity, distance = (velocity) · (time) so $t = d/v$ and using this value of t in the above equation we see

$$(1) \qquad A_T(v) = (D_s \cdot D_b) \cdot (i) \cdot (\tfrac{d}{v}) \text{ for } 0 < v \leq v_{max}.$$

We have therefore constructed $A_T(v)$.

My next step is to construct $A_B(v)$. Again, I will begin by considering a special case. I will assume that the wind is blowing at a velocity that exceeds the maximum speed our runner can run, $w > v_{max}$, and the wind is blowing in the same direction as the runner runs.

I would also like to start by again considering the special case of the runner standing still for t seconds. What is the volume of water that hits the body only of the runner if our runner stands still for t seconds? Clearly only the back of our rectangular runner is going to get wet since the wind direction is parallel to the path of the runner. In this case we cannot just take the area of the back times the depth of the rain. This particular part of the body is not a parallel plane to the horizontal ground, and therefore we must project the area that is getting wet down to the horizontal ground (see Figure Two) where the rainfall depth is measured. This is accomplished by finding the area on the ground that would have received the rain but instead hit the back of the runner. The angle θ is determined by the downward limiting velocity of the rainfall and the wind speed. Since $\tan(\theta) = w/r$ and $\tan(\theta) = z/D_h$, $z = D_h \cdot (w/r)$ and since accumulated volume = (area of the ground that should have received rain but hit the back instead) · (depth of rain) · (time),

$$A_B(v) = (D_b \cdot D_h \cdot \tfrac{w}{r}) \cdot (i) \cdot (t). \tag{2}$$

The above formula gives the accumulated rainfall on the back of our runner if he is stationary for t seconds. I will now assume that he moves over the path of distance d at a velocity v and therefore $t = d/v$.

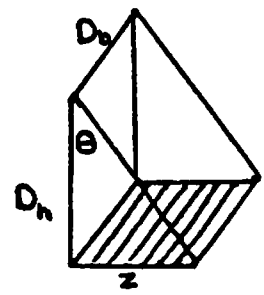

Figure Two

Unfortunately, as he moves at velocity v the angle θ at which the rain strikes his back is reduced. For example, if the wind speed is 20 feet per second and the runner moves at a velocity of 5 feet per second, the net effect on the accumulation of rain on the runner's back is the same as if the wind speed was 15 feet per second on a stationery runner. More specifically, the velocity of the runner effectively reduces the horizontal wind speed by v feet per second to w-v. As a result, when the runner moves at velocity v we must replace w in the previous formula by (w-v).

We also replace t by d/v as in the previous case and obtain the following function

(3) $$A_B(v) = (D_b \cdot D_h \cdot \frac{w-v}{r}) \cdot (i) \cdot (\frac{d}{v}) \text{ for } w > v_{max}.$$

Now let us determine what occurs if the wind speed is not greater than the maximum velocity of the runner. If this is the case then either the velocity of the runner will be greater than, less than, or equal to the constant wind speed. If the velocity of the runner is less than or equal to the velocity of the wind then the effective wind speed remains w-v as in the previous case and therefore $A_B(v)$ will be the same:

(4) $$A_B(v) = (D_b \cdot D_h \cdot \frac{w-v}{r}) \cdot (i) \cdot (\frac{d}{v}) \text{ for } v \leq w.$$

If the velocity of our runner is greater than the wind speed then the net effect is as if the wind was blowing in a stationery runner's face at a velocity of v-w. The rain that hits the front of the runner projects an area on the ground behind the front side of the runner similar to the previous case. As a result, in this case the only thing that changes about the function $A_B(v)$ is that instead of w-v we have v-w:

(5) $$A_B(v) = (D_b \cdot D_h \cdot \frac{v-w}{r}) \cdot (i) \cdot (\frac{d}{v}) \text{ for } w < v \leq v_{max}.$$

Now, since w-v = |w-v| for $v \leq w$ in equations (3) and (4) and v-w = |w-v| for $v > w$ in equation (5), I can rewrite equations (3) through (5) as one equation:

(6) $$A_B(v) = (D_b \cdot D_h \cdot \frac{|w-v|}{r}) \cdot (i) \cdot (\frac{d}{v}) \text{ for } 0 < v \leq v_{max}.$$

I would like to remove the restriction of the wind being only in the direction the runner runs. What about the case when the wind is blowing in the face of the runner? The net effect is that not only is the wind speed affecting how wet the body gets but the velocity adds to the net effect of this wind in the face. If we consider the wind blowing in the face, then the wind speed is negative and equation (5) will once again fulfill the role of the accumulation of rain on the body because v-w is equal to |w-v| in this case.

Now that we have constructed $A_T(v)$ and $A_B(v)$, we can construct A(v) because the two are completely independent of one another and therefore

$$(7) \qquad A(v) = A_T(v) + A_B(v)$$
$$= (D_s \cdot D_b) \cdot (i) \cdot (\tfrac{d}{v}) + (D_b \cdot D_h \cdot \tfrac{|w-v|}{r}) \cdot (i) \cdot (\tfrac{d}{v})$$

for $0 < v \leq v_{max}$. My construction of $A(v)$ is complete and Part I of our modeling problem is finished.

Part II.

Now we turn to our second goal; that is, to minimize $A(v)$ on the interval $0 < v \leq v_{max}$. It is interesting and instructive to determine the solution at each intermediate step along the construction process of $A(v)$. Each of the functions given are continuous on the specified intervals. Therefore, in order to minimize the functions we simply differentiate and determine the derivative of the function in order to find a minimum for that particular function.

I would like to begin by minimizing the function $A_T(v)$ from equation (1). By doing so we are trying to find the velocity at which the runner should run if only the head gets wet. What do you expect the answer to be? Taking the derivative of equation (1),

$$A_T'(v) = (D_s \cdot D_b \cdot i \cdot d) \cdot (- 1/v^2).$$

Since all the constants and v are always positive, we see that $A_T'(v) < 0$ and therefore $A_T(v)$ is decreasing for all v in $0 < v \leq v_{max}$. The minimum value of $A_T(v)$ therefore occurs at the right end point of the interval and the solution is for the runner to run as fast as possible as you may have expected.

Now let us turn to minimization of the next step of the construction process, $A_B(v)$. In minimizing this particular step, I would like to break the problem up just as we did in the construction process. First I will look at the case when the wind speed is greater than the maximum speed of our runner ($w > v_{max}$), then I will look at the cases where the velocity either is less than or equal to the wind speed ($v \leq w$), or is greater than the wind speed ($w < v \leq v_{max}$).

At what velocity should the runner run to stay driest if only the body gets wet and the wind speed is greater than the maximum velocity ($w > v_{max}$)? In order to find this minimum we simply take the derivative of equation (3):

$$(8) \qquad A_B'(v) = (D_b \cdot D_h \cdot \tfrac{w}{r} \cdot i \cdot d) \cdot (- 1/v^2) \text{ for } w > v_{max}.$$

Again, the derivative is negative since all the constants are positive and v is positive. Therefore, $A'_B(v) < 0$ and $A_B(v)$ is decreasing on the interval $0 < v \leq v_{max}$. Just as before, the minimum occurs when the runner is running as fast as possible ($v = v_{max}$).

Now I would like to consider what happens when the wind speed is positive but not greater than the maximum velocity ($0 < w < v_{max}$). If this is the case then there are two possible cases: either the velocity is less than or equal to the wind speed ($v \leq w$) or the velocity is greater than the wind speed ($0 < w < v \leq v_{max}$). We will look at the derivative on these intervals separately because of the absolute value term in equation (6). If $v \leq w$ then we are minimizing equation (4) and the derivative is

$$(9) \qquad A'_B(v) = (D_b \cdot D_h \cdot \tfrac{w}{r} \cdot i \cdot d) \cdot (- 1/v^2) \text{ for } v \leq w.$$

This is the same as equation (8) and so, for the same reason, $A_B(v)$ is a decreasing function when $v \leq w$. If $0 < w < v \leq v_{max}$ then we are minimizing equation (5) and the derivative is

$$(10) \qquad A'_B(v) = (D_b \cdot D_h \cdot \tfrac{w}{r} \cdot i \cdot d) \cdot (1/v^2) \text{ for } 0 < w < v \leq v_{max}.$$

Again, since all the constants are positive and v is positive, $A'_B(v) > 0$ and thus $A_B(v)$ is increasing on the interval $0 < w < v \leq v_{max}$. Therefore, since the function $A_B(v)$ is decreasing on the interval $v \leq w$ and increasing on the interval $w < v$, the minimum of $A_B(v)$ occurs when $v = w$ for the case when the wind speed is less than the maximum speed of the runner.

The final case we must investigate is when $w \leq 0$. The correct equation for $A_B(v)$ is equation (5) and $A'_B(v)$ is as in equation (10). If w is negative then $A'_B(v) < 0$ and the minimum occurs at the end point v_{max}. But what about the case where the wind speed is zero? In this case $A_B(v)$ in equation (5) is constant and hence, rather surprisingly, it makes no difference at what speed the runner moves. He accumulates the same amount of rain on the body.

Summarizing my results for the minimization of $A_B(v)$, we have that

If:	*then:*
$w > v_{max}$	minimum at $v = v_{max}$ (run as fast as possible)
$0 < w \leq v_{max}$	minimum at $v = w$ (run like the wind)

$w < 0$	minimum at $v = v_{max}$ (run as fast as possible)
$w = 0$	minimum occurs at any speed

It is interesting to note that if you look at equation (6) you can see that if $v = w$ then $A_B(v) = 0$. This is a reasonable result because the rain behind the runner will never catch him and he will never catch the rain in front of him.

Now that we have investigated the results of these special cases, let us determine the minimization of $A(v)$. It is interesting to speculate on the expected results. If our runner runs at the wind speed, his body will not get wet but his head will (the rain is on the brain). If he has a big head he may still have to run as fast as possible. If he has a small head he may want to run like the wind. Let us find out.

Again, we must investigate the function on separate intervals since there is an absolute value involved in the expression for $A(v)$. We will investigate the solution for $w > v_{max}$ and for $w < v \leq v_{max}$. To accomplish this we use equations (3) or (5) for the $A_B(v)$ part of $A(v)$ depending on the interval. $A_T(v)$ is unchanged on the entire interval.

If $w > v_{max}$ then

$$(11) \qquad A(v) = (D_s \cdot D_b) \cdot (i) \cdot \left(\frac{d}{v}\right) + \left(D_b \cdot D_h \cdot \frac{w-v}{r}\right) \cdot (i) \cdot \left(\frac{d}{v}\right)$$

and the derivative of this function is

$$(12) \qquad A'(v) = \left(D_b \cdot i \cdot d\right)\left(D_s + D_h \cdot \frac{w}{r}\right)\left(-1/v^2\right)$$

Since all the constants are positive and v is positive, $A'(v) < 0$ and therefore $A(v)$ is decreasing when $w > v_{max}$. The minimum therefore occurs at the right end point $v = v_{max}$.

In the case $0 < w \leq v_{max}$ we must consider two cases just as we did in minimizing $A_B(v)$ with equations (9) and (10). We will consider the cases where $v \leq w$ and $w < v \leq v_{max}$. If $v \leq w$ then $A(v)$ is the same as in equation (11) and the derivative will also be the same (equation (12)). Therefore, $A'(v) < 0$ and $A(v)$ is decreasing when $v \leq w$. If $w < v \leq v_{max}$ then we replace the $A_B(v)$ part of $A(v)$ by equation (5). Therefore

$$(13) \qquad A(v) = (D_s \cdot D_b) \cdot (i) \cdot \left(\frac{d}{v}\right) + \left(D_b \cdot D_h \cdot \frac{v-w}{r}\right) \cdot (i) \cdot \left(\frac{d}{v}\right)$$

and the derivative of this equation is

(14) $$A'(v) = \left(D_b \cdot i \cdot d\right)\left(D_s - D_h \cdot \frac{w}{r}\right)\left(-1/v^2\right).$$

In this case, $A'(v)$ may be positive, negative or zero. The signs of the first and last factors are fixed but the middle term can be positive, negative or zero:

Case 1: if $D_s > D_h \cdot \frac{w}{r}$ then $A'(v) < 0$

Case 2: if $D_s < D_h \cdot \frac{w}{r}$ then $A'(v) > 0$

Case 3: if $D_s = D_h \cdot \frac{w}{r}$ then $A'(v) = 0$.

Therefore if $w \leq v_{max}$ there are three possible outcomes depending on the magnitudes of the constants. We know that if $v \leq w$ then the function is decreasing, and what the function does after w is determined by D_s, D_h, w and r. If $v > w$ then for Case 1, the function decreases and the minimum occurs when the runner runs as fast as possible ($v = v_{max}$); for Case 2, the function increases and the minimum occurs when the runner runs like the wind ($v = w$); and for Case 3, the function takes a constant value and the minimum occurs anywhere on the interval between the wind speed and the maximum speed of the runner ($w \leq v \leq v_{max}$).

If $w \leq 0$ then $A(v)$ and $A'(v)$ are the same as in the previous equations (13) and (14), but since w is negative or zero the derivative is negative in all cases; therefore the minimum occurs at $v = v_{max}$ and the runner should run as fast as possible.

We have therefore found the minimum for $A(v)$ for all possible values of w. Part II of our modeling problem is complete.

Conclusions.

For the modeling problem posed we conclude that the optimal speed to run is as follows:

If	*then*
$w \leq 0$	run as fast as possible;
$0 < w < v_{max}$	run like the wind (except in some cases); and
$w \geq v_{max}$	run as fast as possible.

Body Shape Modifications.

It is interesting to consider a modification of the assumption concerning the body shape of our runner. I would like to modify the assumption that the body shape is that of a parallelepiped and instead consider it to be in the shape of a sphere with diameter D_0. The wind speed being greater than zero is the most interesting case so we assume $w > 0$. Again it will be necessary to look at some special cases. I would like to begin by considering the volume of water that hits the spherical runner if our runner stands still for t seconds. The wind affects what part of the sphere gets wet and also how wet the sphere gets. The rain that would have hit the ground but instead hits the sphere projects an elliptical area on the ground if the wind is blowing and a circle if it is not. When the wind is blowing the reason the projected area is an ellipse is because the ground is not a perpendicular plane to the axis of the cylinder projected by the sphere except in the case of no wind. The projection on the ground of the sphere will have a minor axis equal to the length of the diameter. This is because any time a cylinder is cut by a plane, one of the axes (the minor axis) is equal to the diameter of the cylinder. Since the diameter of the cylinder is equal to the diameter of the spherical runner, the minor axis is the diameter of the sphere.

Since Ω (see Figure Three) is determined by the wind speed and the limiting downward velocity of the rainfall, the Pythagorean theorem and

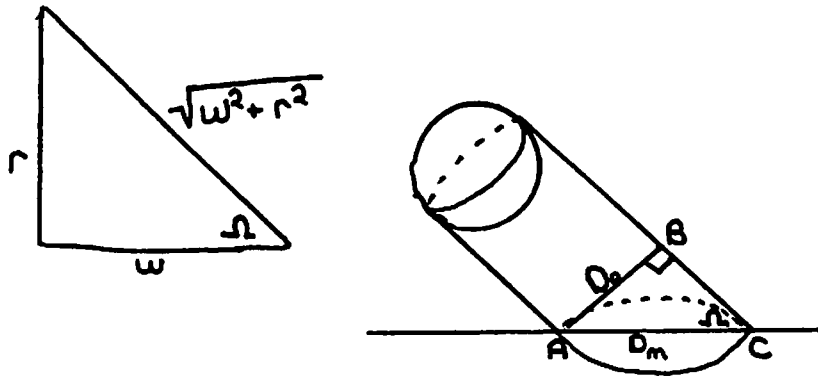

Figure Three

some simple trigonometry shows that

$$\sin \Omega = r/\sqrt{w^2 + r^2}.$$

In the right triangle ΔABC, the segment AB is equal to D_0 and the segment AC is equal to the length of the major axis. We can find another expression for sin Ω using these segments of the triangle. Let AC (the major axis) be represented by D_m. Then sin $\Omega = D_0/D_m$ and we can solve these equations for the length of the major axis:

$$D_m = D_0 \cdot \sqrt{w^2 + r^2} / r \tag{15}$$

We see that this equation works even for $w = 0$ because $D_m = D_0$ if $w = 0$. Since the area of an ellipse is $\pi/4$ times the product of the lengths of the major and minor axes, the area of the projected ellipse is $(\pi/4) \cdot (D_0) \cdot (D_m)$. Just as in the rectangular case, once we have found the projected area on the ground we are ready to formulate the equation to express the volume of water that it accumulates: accumulated water = (projected area) · (depth of rain per second) · (time in seconds) and so

$$A(v) = \frac{\pi}{4} D_0 \cdot D_0 \cdot \frac{\sqrt{w^2 + r^2}}{r} \cdot i \cdot t$$

Now we will let the ball roll (that is, the runner runs from P to Q). The length of the major axis now is found by using $|w-v|$ as the effective wind speed. Therefore, w is replaced by $|w-v|$. The reasoning is similar to the case presented for $A_B(v)$. Since it is squared, we will replace $|w-v|$ by $(w-v)$; we also will replace t by d/v as we have done in previous cases.

$$A(v) = \frac{\pi D_0^2 \, i \, d}{4r} \frac{\sqrt{(w-v)^2 + r^2}}{v} \quad \text{for } 0 < v \leq v_{max}.$$

Taking the derivative of this function and setting it equal to zero, one obtains a relative minimum at an unexpected value of $v = (r^2 + w^2)/w$. If this value happens to be greater than v_{max} then the solution is instead $v = v_{max}$.

A Wind Direction Generalization.

An interesting generalization of our model is obtained by removing the restriction that the wind direction be parallel to the path from P to Q. Under the parallelepiped body assumption, the construction of the wetness function A(v) is complicated by the addition of the volume of rain that hits one side of the body. The details of the construction and minimization of A(v) are too cumbersome to be included in this short paper. However, the conclusions obtained are similar to those obtained in

the case considered earlier. If Δ in Figure Four is greater than or equal to 90° then the runner stays driest by running as fast as possible. If $0 \leq \Delta < 90^\circ$ then the runner stays driest by running at the wind component speed w_{path}. As in the parallelepiped case there are some special cases of body size, wind speed, and direction that affect the solution.

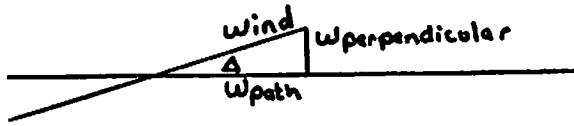

Figure Four

Summary.

How fast should one run in a rainstorm to stay as dry as possible? I hope my model has provided some insight into possible solutions to this question as well as illustrating typical techniques used in the art of mathematical modeling. I expect that the question posed has been addressed by modeling enthusiasts in the past and, I hope, will be considered anew by modeling enthusiasts in the future. For me the question was a novel idea and was a fun way of learning another of the important uses of mathematics in a real world situation.

The Probabilities of a Craps Game

Michael R. Allen, *student*

Tennessee Alpha

Tennessee Technological University
Cookeville, Tennessee 38505

Presented at the 1989 National Convention and
awarded SECOND PLACE by the Awards Committee.

Craps is a common game of chance that is played with two six-sided dice. Just like most other games, the outcome is the sum of the two dice. A sum of 7 or 11 on the first toss is a "win" while a sum of 2, 3 or 12 is a "loss." If the first toss produces a sum of 4, 5, 6, 8, 9 or 10 then the player receives that number as the "point." To win with a point, the player must keep tossing until the point is rolled again without a roll of 7.

The sample space for a normal craps game is:

(1,1)	(1,2)	(1,3)	(1,4)	(1,5)	(1,6)
(2,1)	(2,2)	(2,3)	(2,4)	(2,5)	(2,6)
(3,1)	(3,2)	(3,3)	(3,4)	(3,5)	(3,6)
(4,1)	(4,2)	(4,3)	(4,4)	(4,5)	(4,6)
(5,1)	(5,2)	(5,3)	(5,4)	(5,5)	(5,6)
(6,1)	(6,2)	(6,3)	(6,4)	(6,5)	(6,6)

and the probabilities, P, of the sums, k, of the dice are:

k:	2	3	4	5	6	7	8	9	10	11	12
P:	$\frac{1}{36}$	$\frac{2}{36}$	$\frac{3}{36}$	$\frac{4}{36}$	$\frac{5}{36}$	$\frac{6}{36}$	$\frac{5}{36}$	$\frac{4}{36}$	$\frac{3}{36}$	$\frac{2}{36}$	$\frac{1}{36}$

The probabilities for this game are:

$$P(\text{winning on the first toss}) = P(7 \text{ or } 11) = P(7)+P(11) = 8/36$$

$$P(\text{losing on the first toss}) = P(2, 3 \text{ or } 12) = 4/36$$

$$P(\text{rolling point k after rolling it before rolling a 7})$$

$$= \frac{P(k)}{1 - P(\text{not k or 7})} = \frac{P(k)}{P(k) + P(7)} = P(k|k \text{ or } 7)$$

and so

$$P(\text{winning on point k}) = P(k)\cdot P(k|k \text{ or } 7).$$

There are two exclusive ways of winning the game: winning on the first toss or winning on a point, and hence:

$$P(\text{win}) = P(\text{win on first toss}) + P(\text{win on a point})$$

$$= P(7 \text{ or } 11)$$

$$+ \Big(P(4)P(4|4 \text{ or } 7) + P(5)P(5|5 \text{ or } 7) + P(6)P(6|6 \text{ or } 7) \Big)$$

$$+ \Big(P(8)P(8|8 \text{ or } 7)+P(9)P(9|9 \text{ or } 7)+P(10)P(10|10 \text{ or } 7) \Big)$$

$$= \left(\frac{6}{36} + \frac{2}{36} \right) + \left(\frac{3}{36}\frac{3}{9} + \frac{4}{36}\frac{4}{10} + \frac{5}{36}\frac{5}{11} \right)$$

$$+ \left(\frac{5}{36}\frac{5}{11} + \frac{4}{36}\frac{4}{10} + \frac{3}{36}\frac{3}{9} \right)$$

$$= 0.4929.$$

Obviously, this game is a fair game with the chance of winning being close to 1/2. The question is: "What happens to the game if four- or eight-sided dice are used?" In general, "What are the results of a game with n-sided dice?"

If we use four-sided dice in a craps game, then the rules must be altered slightly. Instead of having a sum of 7 or 11 to win, now a sum of 5 or 7 must be rolled to win. A sum of 2, 3 or 8 rolled is now a loss. That leaves a sum of 4 or 6 for a point and to win on a point, a sum of 5 must not be rolled. Otherwise, the rest of the rules remain unchanged.

With this game, the probabilities of the sum of the dice are:

k:	2	3	4	5	6	7	8
P:	$\frac{1}{16}$	$\frac{2}{16}$	$\frac{3}{16}$	$\frac{4}{16}$	$\frac{3}{16}$	$\frac{2}{16}$	$\frac{1}{16}$

Since we are considering the probability of winning, I shall omit the rest of the calculations because of repetition. The probability of winning on the first toss and of winning on a point are calculated in the same way as before and

$$\begin{aligned} P(\text{win}) &= P(\text{win on first toss}) + P(\text{win on a point}) \\ &= P(5 \text{ or } 7) + \Big(P(4)P(4|4 \text{ or } 5) + P(6)P(6|6 \text{ or } 5) \Big) \\ &= \left(\frac{4}{16} + \frac{2}{16} \right) + \left(\frac{3}{16}\frac{3}{7} + \frac{3}{16}\frac{3}{7} \right) \\ &= 0.5357. \end{aligned}$$

It is interesting to note that the probability of winning goes up.

Next, consider a game with seven-sided dice. As before the rules must be altered slightly to use these dice. To win on the first toss the player must get a sum of 8 or 13. A loss is then a sum of 2, 3 or 14. Like in a four-sided game, to win on a point the player must not roll a sum of 8. Otherwise, the rest of the rules remain unchanged. The probability of winning with seven-sided dice is

$$\begin{aligned} P(\text{win}) &= P(8 \text{ or } 13) + \sum_{k=4}^{7} P(k)P(k|k \text{ or } 8) + \sum_{k=9}^{12} P(k)P(k|k \text{ or } 8) \\ &= \left(\frac{7}{49} + \frac{2}{49} \right) + \left(\frac{3}{49}\frac{3}{10} + \frac{4}{49}\frac{4}{11} + \frac{5}{49}\frac{5}{12} + \frac{6}{49}\frac{6}{13} \right) \\ &\quad + \left(\frac{6}{49}\frac{6}{13} + \frac{5}{49}\frac{5}{12} + \frac{4}{49}\frac{4}{11} + \frac{3}{49}\frac{3}{10} \right) \\ &= 0.4778. \end{aligned}$$

In this case the probability goes down.

Now, if we use eight-sided dice, the rules again must be changed. To win, one must either roll a sum of 9 or 15 on the first toss or roll the point after rolling a point. A losing roll is a sum of 2, 3 or 16 on the first

toss or a sum of 9 after rolling a point. The probability of winning with eight-sided dice is therefore:

$$\begin{aligned} P(\text{win}) &= P(9 \text{ or } 15) + \sum_{k=4}^{8} P(k)P(k|k \text{ or } 9) + \sum_{k=10}^{14} P(k)P(k|k \text{ or } 9) \\ &= P(9 \text{ or } 15) + 2\sum_{k=4}^{8} P(k)P(k|k \text{ or } 9) \qquad \text{(by symmetry)} \\ &= \tfrac{10}{64} + 2\left(\tfrac{3}{64}\tfrac{3}{11} + \tfrac{4}{64}\tfrac{4}{12} + \tfrac{5}{64}\tfrac{5}{13} + \tfrac{6}{64}\tfrac{6}{14} + \tfrac{6}{64}\tfrac{6}{14} \right) \\ &= 0.4660. \end{aligned}$$

This time the probability drops even further.

Obviously, a pattern is forming for the probabilities of winning and for the rules as the number, n, of sides of the dice increases. Let me now give the probabilities of winning for four- to twelve-sided dice without all the calculations:

n:	4	5	6	7
P(win):	0.5357	0.5122	0.4929	0.4778

n:	8	9	10	11	12
P(win):	0.4660	0.4566	0.4490	0.4428	0.4376

Notice that the probability is becoming less and less. The obvious question is: "What happens to the probability of winning with n-sided dice as n increases?"

Now, consider a game with n-sided dice. Of course, we must alter the rules some to accommodate the dice. A win is a roll of n+1 or 2n-1 or a point after a point. A loss is a roll of 2, 3 or 2n or an n+1 after a point. For this problem we need to find the distribution of the sum of the two n-sided dice. The probability density function ("pdf") of a game with n-sided dice is denoted f(x) and is given by

$$f(x) = \frac{n - |x - (n+1)|}{n^2}$$

where x is the sum of the two n-sided dice and goes from 2 to 2n. For ease of computation, let

$$g(y) = \frac{n - |y|}{n^2}$$

where $y = x - (n+1)$ goes from $-(n-1)$ to $+(n-1)$. Since each $g(y) > 0$, $g(y)$ will be a pdf if $\Sigma\, g(y) = 1$, because the probability of getting any sum is 1. We next show that $g(y)$ is a pdf:

$$\sum_{y=-(n-1)}^{n-1} g(y) = \sum_{y=-(n-1)}^{n-1} \frac{n - |y|}{n^2}$$

$$= \frac{1}{n} + \frac{2}{n^2} \sum_{y=1}^{n-1} \left(n - y \right) \quad \text{(by symmetry)}$$

$$= \frac{1}{n} + \frac{2}{n^2} \left(n(n-1) - \frac{n(n-1)}{2} \right) = 1$$

Therefore, $g(y)$ is a pdf and by the transformation $y = x - (n+1)$, so is $f(x)$. Here are the probabilities for a craps game using n-sided dice:

$$P(\text{winning on the first toss}) = P(n+1 \text{ or } 2n-1)$$

$$= \frac{n - |\, n+1 - (n+1)\,|}{n^2} + \frac{n - |\, 2n-1 - (n+1)\,|}{n^2}$$

$$= \frac{1}{n} + \frac{2}{n^2}$$

$$P(\text{losing on the first toss}) = P(2, 3 \text{ or } 2n)$$

$$= \frac{n - |2-(n+1)|}{n^2} + \frac{n - |3-(n+1)|}{n^2} + \frac{n - |2n-(n+1)|}{n^2}$$

$$= \frac{4}{n^2}$$

$$P(\text{rolling point } k \text{ after rolling it before rolling a } n+1)$$

$$= P(k|k \text{ or } n+1) = \frac{n - |\, k - (n+1)\,|}{n - |\, k - (n+1)\,| + n}$$

and since $P(\text{winning on point } k) = P(k) \cdot P(k|k \text{ or } n+1)$, the probability of winning is

$$P(\text{win}) = \frac{1}{n} + \frac{2}{n^2} + \frac{2}{n^2}\sum_{k=4}^{n} \frac{(n - |k - (n+1)|)^2}{2n - |k - (n+1)|}$$

From the table of probabilities of winning, the probabilities seem to be converging as n gets larger. To see whether this is the case, I wrote a simple computer program to calculate the probabilities of winning for several n's. The program looked much like this Pascal program:

```
begin
    for n := 4 to 100 do
    begin
        sum := 0;
        for y := 1 to n-3 do
        begin
            sum := sum + (n-y)^2/(2*n-y);
        end;
        probability := ((2*sum+2)/n^2) + (1/n);
        writeln(probability);
    end;
end.
```

The probabilities the computer calculated agreed with those I found for four- to twelve-sided dice. Here now are the probabilities for larger values of n:

n	P(win)
50	0.396030
100	0.391497
1000	0.386796
10000	0.386344
100000	0.386299
1000000	0.386294

It seems that the probability of winning as n gets very large does not go to zero as might be expected but to 0.386294.

Using z = k-1,

$$P(\text{win}) = \frac{1}{n} + \frac{2}{n^2} + \frac{2}{n^2}\sum_{k=4}^{n} \frac{(n - |k - (n+1)|)^2}{2n - |k - (n+1)|}$$

can be written as

$$P(\text{win}) = \frac{1}{n} + \frac{2}{n^2} + \frac{2}{n^2}\sum_{z=3}^{n-1}\frac{z^2}{n+z}$$

Now, adding the terms corresponding to z = 1, 2 and n and then subtracting the same terms, we get

$$P(\text{win}) = \frac{1}{n} + \frac{2}{n^2} + \frac{2}{n^2}\left(\sum_{z=1}^{n}\frac{z^2}{n+z} - \left(\frac{1}{n+1} + \frac{4}{n+2} + \frac{n^2}{2n}\right)\right)$$

$$= \frac{2}{n^2}\sum_{z=1}^{n}\frac{z^2}{n+z} + \frac{2}{n^2}\left(1 - \frac{1}{n+1} - \frac{4}{n+2}\right).$$

Taking the limit as n approaches infinity, the second part of our expression goes to zero and so

$$\lim_{n\to\infty} P(\text{win}) = \lim_{n\to\infty}\frac{2}{n^2}\sum_{z=1}^{n}\frac{z^2}{n+z}$$

Since

$$\frac{2}{n^2}\sum_{z=1}^{n}\frac{z^2}{n+z} = \frac{2}{n^2}\sum_{z=1}^{n}\left(\frac{z^2-n^2}{n+z} + \frac{n^2}{n+z}\right)$$

$$= \frac{2}{n^2}\sum_{z=1}^{n}(z-n) + \frac{2}{n^2}\sum_{z=1}^{n}\frac{n^2}{n+z}$$

$$= \frac{2}{n^2}\left(\frac{n(n+1)}{2} - n^2\right) + 2\sum_{z=1}^{n}\frac{1}{n+z}$$

$$= -1 + \frac{1}{n} + 2\sum_{z=1}^{n}\frac{(1/n)}{1+(z/n)}$$

and the summation term is the Riemann sum for the integral of 1/(1+x) from 0 to 1,

$$\lim_{n\to\infty} P(\text{win}) = -1 + 2\int_0^1\frac{dx}{1+x}$$

$$= -1 + 2\ln(1+x)\Big|_0^1 = 0.386294.$$

This result agrees with the previous calculations for large values of n. From this it is easy to say that if someone is playing a game of craps with n-sided dice that they have at least a 0.386294 chance of winning.

Now let us look at the probability of winning an n-sided game with the rules for losing on the first roll slightly altered. In the previous calculations, the summation for winning on a point went from 4 to 2n-2 and did not include n+1. Instead of losing on the first roll with a 2, 3 or 2n, let a roll of 2, 3, 4, ..., k or 2n-(k-2), 2n-(k-3), ..., 2n (not including 2n-1) on the first toss be a loss. All the other rules are the same. For our first calculation, let k = n/2 (if n is odd then let k = (n+1)/2). With these rules, the probability of winning a game using n-sided dice is

$$P(\text{win}) = \frac{1}{n} + \frac{2}{n^2} + \frac{2}{n^2}\sum_{z=k}^{n-1} \frac{z^2}{n+z}$$

Since the first two terms go to zero as n goes to infinity, we need only examine the summation. Adding and subtracting terms to the summation as before, we have

$$\frac{2}{n^2}\sum_{z=k}^{n-1} \frac{z^2}{n+z} = \frac{2}{n^2}\left(\sum_{z=1}^{n} \frac{z^2}{n+z} - \frac{n^2}{2n} - \sum_{z=1}^{k-1} \frac{z^2}{n+z}\right),$$

and then, by the previous calculations, the limiting value of the first term is -1 + 2ln(2) and the second term goes to zero. Applying the same method to the second summation,

$$\frac{2}{n^2}\sum_{z=k}^{k-1} \frac{z^2}{n+z} = \frac{2}{n^2}\left(\sum_{z=1}^{k} \frac{z^2}{n+z} - \frac{k^2}{n+k}\right),$$

and then

$$\frac{2}{n^2}\sum_{z=1}^{k} \frac{z^2}{n+z} = \frac{2}{n^2}\sum_{z=1}^{k}\left(z - n + \frac{n^2}{n+z}\right)$$

$$= \frac{k(k+1)}{n^2} - \frac{2k}{n} + 2\sum_{z=1}^{k} \frac{1}{n+z}$$

For $k = n/2$ this becomes

$$\frac{1}{4} + \frac{1}{2n} - 1 + \sum_{z=1}^{n/2} \frac{1}{(\frac{1}{2})(\frac{n}{2})(1 + \frac{z/2}{n/2})}$$

and then, with the same method as before,

$$\lim_{n\to\infty} P(\text{win}) = \Big(-1 + 2\ln(2)\Big) - \Big(\frac{1}{4} + 0 - 1 + \int_0^1 \frac{dx}{1 + (x/2)}\Big)$$

$$= 2\ln(2) - \frac{1}{4} - 2\ln(1 + \frac{x}{2})\Big|_0^1$$

$$= 2\ln(2) - \frac{1}{4} - 2\ln(3/2) = 0.325364.$$

Using a computer program similar to the one before, the program was executed with $n = 1000000$ and the results agreed. Now the next question is what happens if $k = n/3$. Or, what if $k = \alpha n$ where α is between 0 and 1. Proceeding as above we find

$$\frac{2}{n^2}\sum_{z=1}^{\alpha n} \frac{z^2}{n+z} = \alpha^2 + \frac{\alpha}{n} - 2\alpha + 2\sum_{z=1}^{\alpha n} \frac{1}{(\frac{1}{\alpha})(\alpha n)(1 + \frac{\alpha z}{\alpha n})}$$

and then, just as before,

$$\lim_{n\to\infty} P(\text{win}) = \Big(-1 + 2\ln(2)\Big) - \Big(\alpha^2 - 2\alpha + 2\int_0^1 \frac{\alpha\, dx}{1 + \alpha x}\Big)$$

$$= 2\ln(2) - (1 - \alpha)^2 - 2\ln(1 + \alpha).$$

Therefore, the probability of winning an n-sided craps game where the number of ways to lose on the first roll depends on α is as given above. Turning to the computer, this result was tested and verified for various α's from 0.01 to 0.99.

Returning to the original rules for an n-sided game, there is another interesting result. The mean and variance of $g(y)$ are $\mu = E(y) = 0$ and

variance $\sigma^2 = E(y^2) = (n^2-1)/6$. By normalizing y, we can use the normal distribution (the "bell curve") as an approximation to the distribution to the normalization

$$z = \frac{y - \mu}{\sigma} = \left(y - 0\right)/\left(\sqrt{(n^2 - 1)/6}\right)$$

and, in turn, the distribution of x. The question is "How does this distribution of z compare with the standard normal distribution?" Can we use the normal curve to get the probability of rolling a particular sum? Using the computer again, the pdf of z was calculated from -3 to 3, the same interval as in many normal tables. Here is a comparison for a few of the intervals $P(z \leq w)$ with $n = 10000$:

w	Sum of pdf	Normal Distribution
-3.00	0.0000	0.001
-2.75	0.0000	0.003
-2.50	0.0000	0.006
-2.00	0.0133	0.023
-1.75	0.0352	0.040
-1.50	0.0674	0.067
-1.00	0.1632	0.159
-0.75	0.2268	0.227
-0.50	0.3007	0.309
0.00	0.5000	0.500
0.50	0.6833	0.691
0.75	0.7594	0.773
1.00	0.8249	0.841
1.50	0.9326	0.933
1.75	0.9532	0.960
2.00	0.9832	0.977
2.50	1.0000	0.994
2.75	1.0000	0.997
3.00	1.0000	0.999

Notice that for $z \leq 2.50$ the probability is 1. At $z \leq \sqrt{6}$, in fact, the summation of the pdf reaches 1. This is because the summation only goes from $-\sqrt{6}$ to $\sqrt{6}$. Beyond these limits the normal curve has 0.016 of its area.

To conclude, we have found that the probability of winning a game of craps with n-sided dice as n goes to infinity is 0.386294, not zero as suspected. In fact, beyond 100 sides, we can consider the probability of

winning to be 0.386 with only a small error. By setting the number of loses on the first toss dependent on the number of sides, we found that the probability of winning is $2 \ln(2) - (1 - \alpha)^2 - 2 \ln(1 + \alpha)$ where the dependence α is between 0 and 1. For $\alpha = 1/2$, the probability is 0.325364. Next, the normal distribution can be used to approximate the sum with an error in probability of 0.016. Finally, with the distribution of the sum of two dice and the integration technique, it is possible to find the probability of winning using any kind of dice and any similar rules to the game of craps.

This paper was based on my independent study with Prof. S. A. Patil, September 1988 to March 1989.

Bibliography.

Hogg, Robert V., and Tanis, Elliot A. *Probability and Statistical Inference.* Third Edition. New York: Macmillan, 1983.

Hogg, Robert V., and Craig, Allen T. *Introduction to Mathematical Statistics.* Fourth Edition. New York: Macmillian, 1978.

Has Your Subscription Expired?

Your *Pentagon* subscription expires with the Volume and Number that appears in the upper right corner of your address label (see back cover). Since this issue is Volume 49 Number 1, if the code 49-1 appears on your label then THIS IS YOUR LAST ISSUE! Please send your renewal check -- just $5 for 4 more issues -- together with your name and address to:

Business Manager
The Pentagon
c/o Department of Mathematics
C. W. Post / Long Island University
Brookville, New York 11548 USA

(add $2 for foreign delivery). Please renew promptly to avoid gaps in your journal collection.

Underwater Mathematical Modeling

Susan Paulson, *student*

Missouri Iota

Missouri Southern State College
Joplin, Missouri 64801

Presented at the 1989 National Convention and
awarded THIRD PLACE by the Awards Committee.

Introduction.

Decompression sickness (DCS), commonly known as "the bends," first became a problem to man in 1841. The victims were laborers who worked in tunnels beneath rivers. The tunnels were pressurized to keep water from flowing into working areas. When the workers returned to ordinary atmospheric pressure, many of them developed pain in their joints and some became paralyzed.

In 1907, Dr. J. S. Haldane determined a method of "stage decompression" to prevent DCS in the tunnel workers. He found that by bringing anyone who has been in a high pressure environment back to normal atmospheric pressure in gradual stages, DCS does not occur.

A slow decompression eliminates the bends by preventing the formation of small pockets of nitrogen in the blood and tissues. According to Henry's Law, gases will enter a liquid in proportion to the partial pressure of the gas. Thus, if you double the partial pressure of nitrogen, the amount of nitrogen that can be dissolved in the blood and tissues doubles [Jeppesen,1984].

Dissolved nitrogen in the body is harmless as long as it remains dissolved. Nitrogen transfers into and out of the bloodstream in the lungs constantly. However, if the ambient or surrounding pressure is reduced too quickly, the dissolved nitrogen can come out of solution and form tiny bubbles in the blood and tissues of the body.

Consider, as an example, a bottle of soda pop. When the lid is on, the liquid is under pressure and no bubbles are visible. When the lid is removed, the pressure is suddenly reduced and bubbles form.

In the late 19th Century the development of deep-sea diving dress gave rise to an increased incidence of the bends. The United States Navy developed a set of tables to prevent DCS in divers based on the Haldanian model. These tables have been used extensively by commercial and military divers since their publication in 1937. With the advent of SCUBA, civilian sport divers began using the tables with mixed success. With over 2 million sport divers in the United States, the incidence of the bends has increased dramatically. Even when the Navy tables are followed correctly, the likelihood of a bend hit is between 2 and 5 percent. The formation of bubbles in the tissue may manifest itself in a variety of ways including localized pain, central nervous system detriment, and pulmonary function impairment. Because of the seriousness of this malady, the development of safer dive tables is a topic of ongoing research.

The Problem.

The purpose of this paper is develop an algorithm which could be programmed for a small microprocessor linked to a depth sensitive transducer. The microprocessor would compute the partial pressure of nitrogen in the tissues while the diver is underwater and allow for the safe return to the surface. A second purpose was to compare this algorithm to existing tables and algorithms.

Assumptions of the Model.

(1) Gas diffuses across tissue membranes at a rate proportional to the difference between the partial pressure of the gas in the tissue and the inspired air.

(2) There is a continuous spectrum of tissue groups within the body with various rates of absorption and elimination.

(3) Body tissues can be approximated by a finite number of tissue groups. Tissue group half-times are fixed at 5, 10, 20, 40 and 80 minutes and are denoted by T_1.

(4) Specific tissue groups absorb and eliminate gases at a

constant rate.

(5) Each tissue group can tolerate nitrogen in solution with a certain level of supersaturation. Based on the supersaturation ratio used in other models, the author fixed the ratios as follows:

T_1:	5	10	20	40	80
ratio:	3:1	2.5:1	2:1	1.75:1	1.75:1

The half-time of a tissue group refers to the time required for tissue within a group to saturate to one-half the difference between the partial pressure of the inspired gas and the partial pressure of the gas in the tissue. We denote the partial pressure of nitrogen in the inspired mixture by PI and the partial pressure of nitrogen in the tissue by PT. The partial pressure of nitrogen at the surface is denoted by PO.

The diver breathes air which is delivered at ambient pressure. We can determine the pressure at any depth using the formula

$$P = (0.445)D + 14.7$$

where 0.445 is the pressure of one fsw (foot of sea water), D is the depth in feet and 14.7 psi is the pressure at sea level.

The partial pressure of nitrogen is calculated using the formula

$$PI = (0.79)P$$

where 0.79 represents the percentage of nitrogen in the air.

Development of the Model.

The rate of change of pressure (P) in tissue is proportional to the pressure gradient:

$$\frac{dP}{dt} = k(PI - P)$$

and at $T = 0$, $P = PO$. Separating the variables, we get

$$\frac{dP}{PI - P} = k\,dt$$

and so

$$\ln(PI - P) = -kt + C_1$$

or

$$P = PI - C_2\, e^{-kt}.$$

Applying the first initial condition, we get

$$P = PI - (PI - PO)\, e^{-kt}$$

and so, since PI = PO - (PI - PO),

$$P(t) = PO + (PI - PO)(\, 1 - e^{-kt}\,).$$

Let T_1 denote the time for (PI - P) to decrease to one-half its value and we shall denote this pressure PH; thus $P(T_1) = PH$ and

$$PH - PI = -(PI - PO)\, e^{-kT_1}$$

or

$$\frac{PI - PH}{PI - PO} = e^{-kT_1}.$$

Since PH = PO + (PI - PO)/2, we have

$$e^{-kT_1} = 1/2.$$

Thus $k = \ln(2)/T_1$ and hence

$$P(t) = PO + (PI - PO)(\, 1 - e^{-\ln(2)t/T_1}\,).$$

Implementing the Model.

Using five tissue groups, the author simulated several dives keeping track of the partial pressure of nitrogen in each tissue group throughout the dive. The goal was to prevent any tissue group from exceeding its supersaturation ratio. The model was tested on five different dive profiles. The dive profiles are given in Appendix A. Due to research published by the Diver's Alert Network (DAN) indicating that decompression sickness is more likely to occur in a diver completing

multiple dives per day for several days, the author felt that limiting the diver to a single multilevel dive per day would decrease the probability of decompression sickness.

To run the simulated dives, the author wrote a computer program (see Appendix B) based on the derived model. The program allows the diver to make a single multilevel dive and indicates when the diver is at risk. For the purpose of implementation, the author prescribed a descent rate of one foot per second and an ascent rate of one foot per second, which is consistent with the Navy model and allows for direct comparison of output. For each level in the dive the program computes the partial pressure of nitrogen in each tissue group during the descent, while on the bottom and during the ascent. The model updates the partial pressure of nitrogen every two seconds. If the ratio of the partial pressure of nitrogen in the tissues (PTA) to the partial pressure of the nitrogen in the inspired air exceeds the supersaturation ratio, the program would indicate a high probability of DCS. Using this program the author compared this model to the Navy model and to a commercially available computer model (the Huggins model, EDGE underwater computer). In addition the program was used to generate a set of no-decompression limits (see Appendix C) for a single-level dive for depths between 60 and 130 feet.

Testing the Model and Conclusions.

The derived algorithm produced more conservative diving times than those predicted in the Navy diving tables or those generated using the Huggins method for a single-level dive. In conversations with several divers the author was encouraged to test the model for repetitive dives and found that the probability of the bends during a second and third dive did increase significantly, thus supporting the data from DAN. If this algorithm were to be used in a portable microprocessor underwater, the program would have to be modified to accept depth input from a transducer.

To compare the author's model with the Navy tables and the Huggins model for multi-level dives, five typical dives were simulated. Each of the five dives were possible using the derived model and the Huggins model. However, since the Navy tables do not permit multilevel interpretation, dives numbered 2, 3 and 5 could not be completed without decompression. These results support the use of a continuous model for use by sport divers who do not limit their dives to a fixed depth for the entire bottom time.

Bibliography.

Bove, Alfred. "Diving Medicine," *Skin Diver* (November 1988), pp. 10, 44, 60-61, and (December 1988), pp. 20, 55.

Huggins, Karl E. *Microprocessor Applications to Multi-level Air Decompression Problems.* Michigan Sea Grant Publications, 1987.

Jeppesen. *Open Water Sport Diver Manual.* Jeppesen Sanderson Inc., 1984 edition.

Miller, James W. *NOAA Diving Manual: Diving for Science and Technology.* United States Department of Commerce, National Oceanic and Atmospheric Administration. 1979 edition.

U. S. Navy Diving Manual, 1970 edition. U. S. Government Printing Office: Washington, D. C.

Appendix A: Dive Profiles.

These profiles are indicative of the dives preformed in my area.

Profile 1.

Depth (feet):	92	45
Time (minutes):	12	5

Profile 2.

Depth (feet):	128	45	20	10
Time (minutes):	6	5	3	3

Profile 3.

Depth (feet):	162	45	20
Time (minutes):	5	5	3

Profile 4.

Depth (feet):	58	45	24
Time (minutes):	31	12	5

Profile 5.

Depth (feet):	84	38
Time (minutes):	22	11

Appendix B: Program Listing.

```
10  REM
20  REM       A PROGRAM TO COMPUTE PARTIAL PRESSURE OF NITROGEN
30  REM       IN VARIOUS BODY TISSUES USING THE PAULSON MODEL
40  REM
50  REM             WRITTEN  BY  SUSAN  E.  PAULSON
60  REM                      JANUARY   1989
70 DIM D(10),T(10),PT(5)
80 CLS: FOR I = 1 TO 5: PRINT: NEXT I
90            PRINT"     A PROGRAM TO PREVENT DCS FOR A SINGLE MULTILEVEL DIVE"
100            PRINT
110            PRINT: PRINT"ENTER THE MULTILEVEL DIVE PROFILE AS REQUESTED"
120            PRINT
130            INPUT "HOW MANY LEVELS IN THE DIVE ";N
140            PRINT: FOR J = 1 TO N
150            PRINT" ENTER THE DEPTH OF LEVEL ";J: INPUT D(J)
160            PRINT" ENTER THE TIME AT LEVEL ";J: INPUT T(J)
170      NEXT J
180 REM       PRINT HEADINGS
190 LPRINT"         PARTIAL PRESSURE OF NITROGEN IN TISSUE"
200 LPRINT"                   TISSUE GROUPS"
210 LPRINT"                 5            10           20            40
  80"
220 REM      PO IS THE PARTIAL PRESSURE OF THE NITROGEN AT THE SURFACE
230 REM      PI IS THE PARTIAL PRESSURE OF THE NITROGEN IN THE INSPIRED GAS
240 REM      PT IS THE PARTIAL PRESSURE OF THE NITROGEN IN THE TISSUE
250 REM      PTD IS THE PARTIAL PRESSURE OF THE NITROGEN IN THE TISSUE FROM
             THE DESCENT
260 REM      DR IS THE DESCENT RATE (FT/SEC)
270 REM      AR IS THE ASCENT RATE (FT/SEC)
280 DR = 1
290 AR = .666666
```

Program Listing, continued.

```
300 PO = 11.61
310      T1 = 300
320      REM  J DENOTES WHICH TISSUE GROUP IS BEING CONSIDERED
330      J = 1
340      TIME = (D(1)/DR)
350           FOR T = 2 TO TIME STEP 2
360                D = DR * T
370                PI = (.445 * D + 14.7) *.79
380                X = -1.38629/T1
390                Y = 1 - EXP(X)
400                PT = PO + (PI - PO)* Y
410                PO = PT
420           NEXT T
430      PTD(J) = PT : J = J+1
440      PRINT
450      T1 = 2 * T1: PO = 11.61
460      IF T1 <= 4800 THEN 340
470      LPRINT  USING"DESCENT TO ### ##.###        ##.###        ##.###        ##
.###        ##.###";D,PTD(1),PTD(2),PTD(3),PTD(4),PTD(5)
480      REM COMPUTE PT WHILE ON THE BOTTOM
490 FOR I = 1 TO N
500      J = 1 : PO = 11.61
510      T1 = 300
520      T = T(I)*60
530      PI = (.445 * D + 14.7) *.79
540      X = -.69315*T/T1
550      Y = 1 - EXP(X)
560      PT = PTD(J) + (PI - PO) *Y
570      PT(J) = PT : J = J+1
580      T1 = T1 * 2
590      IF T1 <=4800 THEN 520
```

Program Listing, concluded.

```
600      LPRINT USING"BOTTOM          ##.###        ##.###        ##.###         ##.
###        ##.###";PT(1),PT(2),PT(3),PT(4),PT(5)
610      REM  COMPUTE PARTIAL PRESSURE OF NITROGEN ON ASCENT
620      J = 1: T1 = 300
630      PO = PT(J)
640      TIME = (D(I) - D(I+1))/AR
650           FOR T = 2 TO TIME STEP 2
660                D = D(I) - AR * T
670                      IF D <= 40 THEN AR = .33333
680                PI = (.445 * D + 14.7) * .79
690                X = -1.38629/T1
700                Y = 1 - EXP(X)
710                PT = PO + (PI - PO) * Y
720                PO = PT
730           NEXT T
740      PTA(J) = PT : J = J + 1
750      T1 = 2 * T1
760      IF T1 <= 4800 THEN 630
770      LPRINT USING"ASCENDING       ##.###        ##.###        ##.###         ##.
###        ##.###";PTA(1),PTA(2),PTA(3),PTA(4),PTA(5)
780 IF (PTA(1)/PI) > 3 THEN LPRINT "RATIO EXCEEDED FOR 5-MIN TISSUE":GOTO 830
790 IF (PTA(2)/PI) > 2.5 THEN LPRINT "RATIO EXCEEDED FOR 10-MIN TISSUE":GOTO 830
800 IF (PTA(3)/PI) > 2! THEN LPRINT "RATIO EXCEEDED FOR 20-MIN TISSUE": GOTO 830
810 IF (PTA(4)/PI) > 1.75 THEN LPRINT "RATIO EXCEEDED FOR 40-MIN TISSUE":GOTO 83
0
820 IF (PTA(5)/PI) > 1.75 THEN LPRINT "RATIO EXCEEDED FOR 80-MIN TISSUE": GOTO 8
30
830 NEXT I
840 END
```

Appendix C: Comparison of No Decompression Limits.

No decompression time limits in minutes for various models and depths (in feet).

	MODEL:			
DEPTH:	U. S. Navy	Spencer-Huggins (EDGE)	Canadian (DCIEM)	Paulson
60	60	50	50	22
70	50	40	35	17
80	40	30	25	11
90	30	25	20	8
100	25	20	15	6
110	20	15	12	5
120	15	10	10	4
130	10	5	8	3

PME Celebrates Diamond Jubilee

Kappa Mu Epsilon National President Harold L. Thomas sent greetings and congratulations to the members of Pi Mu Epsilon on the occassion of their 75th anniversary this past summer. The honorary mathematics society held their Diamond Jubilee in conjunction with the [AMS and MAA] Joint Mathematics Meetings in Boulder, Colorado, August 7-10, 1989. Founded in 1914 at Syracuse University with the goal of promoting scholarship in mathematics, PME has more than 260 chapters nationwide.

The Problem Corner

Edited by Kenneth M. Wilke

The Problem Corner invites questions of interest to undergraduate students. As a rule the solution should not demand any tools beyond calculus. Although new problems are preferred, old ones of particular interest or charm are welcome, provided the source is given. Solutions should accompany problems submitted for publication. Solutions of the following problems should be submitted on separate sheets before 1 August 1990. Solutions received after the publication deadline will be considered also until the time when copy is prepared for publication. The solutions will be published in the Fall 1990 issue of *The Pentagon*, with credit being given to student solutions. Affirmation of student status and school should be included with solutions. Address all communications to Kenneth M. Wilke, Department of Mathematics, 275 Morgan Hall, Washburn University, Topeka, Kansas 66621.

PROBLEMS 425-429.

Problem 425: Proposed by Bob Prielipp, University of Wisconsin-Oshkosh, Oshkosh, Wisconsin. Find all primes p such that $p^2 + 3$ is a prime number.

Problem 426: Proposed by Dmitry P. Mavlo, Moscow, U.S.S.R. Prove that an arbitrary plane closed curve of length L as shown in the figure below can be completely placed into a pentagon having perimeter P where P is not greater than $(\sqrt{5} - 1)\cdot L$. Consider all cases in which the equality $P = (\sqrt{5} - 1)\cdot L$ holds.

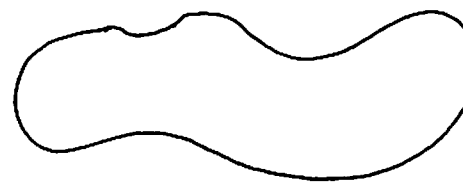

Problem 427: Proposed by Bob Prielipp, University of Wisconsin-Oshkosh, Oshkosh, Wisconsin. Let x and y be real numbers such that

$$x + y = \frac{\pi}{3\sqrt{2}} \quad \text{and} \quad xy = \frac{\pi^2}{144}.$$

Determine the value of sin(x-y).

Problem 428: Proposed by the editor. The figure below shows the paths found in the garden of an eccentric millionaire who required the length of each path to be an integral number of feet. Given that AC = 180, CD = 200 and DE = 69, find the lengths of AB, AD, BC, AE and EF.

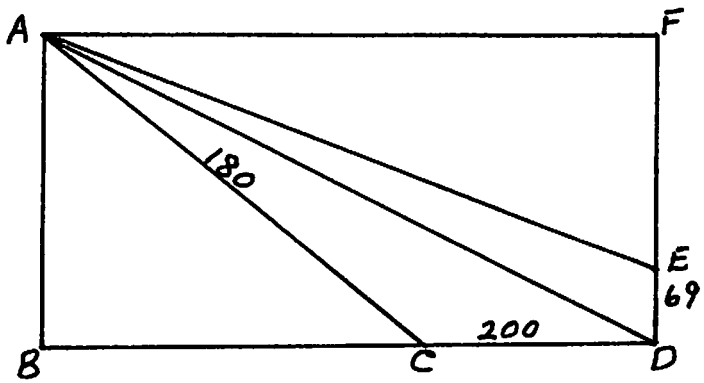

Problem 429: Proposed by the editor. Find an acute angled Heronian triangle such that each side of the triangle is a three-digit number and such that each of the nine positive digits is used in forming the integers representing the sides of the triangle. A Heronian triangle has the property that each of its legs and its area are integers.

SOLUTIONS 408, 414-418.

Problem 408: Proposed by the editor. Dirty Dan had a hot tip on the dog races. He knew that one of four longshots would win the race. If the odds on these four dogs are 3 to 1, 5 to 1, 6 to 1 and 9 to 1 respectively, how much should Dirty Dan bet on each of these four dogs to guarantee making a profit of $143?

Composite solution from submissions by Susan E. Paulsen, Missouri Iota, Missouri Southern State College, Neosho, Missouri; Paul A. Treis, University of Missouri at Rolla, Rolla, Missouri; and William D. Nolte,

Jr., and Charles Ashbacker (jointly), Mount Mercy College, Cedar Rapids, Iowa.

Let A, B, C and D denote the amounts bet at the respective odds 3 to 1, 5 to 1, 6 to 1 and 9 to 1. Next suppose that dog A wins. Then Dan wins three times the amount he bet on dog A but he loses the amounts he bet on dogs B, C and D. This yields the equation

$$3A - B - C - D = 143.$$

Similarly, we obtain the additional equations:

$$\begin{aligned} -A + 5B - C - D &= 143 \\ -A - B + 6C - D &= 143 \\ -A - B - C + 9D &= 143. \end{aligned}$$

The solution of this system is A = \$105, B = \$70, C = \$60 and D = \$42.

Editor's Comment: Paul A. Treis also submitted two other solutions. He notes that to maximize one's profit one should bet "... everything you own and can borrow! (But if your "guarantee" fails, you go to jail!)"

Problem 414: Proposed by the editor. Let S denote the sum of the infinite series

$$1 + \frac{1}{2} + \frac{1}{4} + \frac{1}{5} + \frac{1}{8} + \frac{1}{10} + \cdots$$

in which each denominator contains no prime factor except 2 or 5. What is the value of S?

Solution by Richard A. Gibbs, Fort Lewis College, Durango, Colorado.

Since no prime except 2 or 5 divides any denominator in the given infinite series, the given sum can be written as the product of two convergent geometric series, each having the initial term 1 and the respective ratios 1/2 and 1/5. Hence the given series can be written as

$$\left(1 + \frac{1}{2} + \frac{1}{4} + \cdots\right)\cdot\left(1 + \frac{1}{5} + \frac{1}{25} \cdots\right)$$

$$= \left(\frac{1}{(1 - \frac{1}{2})}\right)\cdot\left(\frac{1}{(1 - \frac{1}{5})}\right) = \frac{5}{2}.$$

Also solved by Bob Prielipp, University of Wisconsin-Oshkosh, Oshkosh, Wisconsin.

Problem 415: Proposed by the editor. Find two or more sets of twenty-three consecutive natural numbers such that the sum of their squares is itself the square of a natural number.

Solution by Bob Prielipp, University of Wisconsin-Oshkosh, Oshkosh, Wisconsin.

Our solution will use the following fact that for each positive integer k,

$$1^2 + 2^2 + \cdots + k^2 = \frac{1}{6}\Big(k(k+1)(2k+1)\Big). \tag{1}$$

Let n be an arbitrary positive integer. Then

$$(n+1)^2 + (n+2)^2 + \cdots + (n+23)^2 = \sum_{k=1}^{n+23} k^2 - \sum_{k=1}^{n} k^2$$

$$= \frac{1}{6}\Big((n+23)(n+24)(2n+47)\Big) - \frac{1}{6}\Big(n(n+1)(2n+1)\Big)$$

$$= 23\Big((n+12)^2 + 44 \Big).$$

Hence we seek solutions of the Diophantine equation

$$x^2 - 23y^2 = -44 \tag{2}$$

where $x = n + 12$ and $(23y)^2$ is the desired square sum. Using a hand calculator, one easily finds the solutions $x = 18$, $y = 4$ (so $n = 6$) and $x = 28$, $y = 6$ (so $n = 16$). But it is well known [1] that if x_1, y_1 is a solution of equation (2), and if X_k, Y_k is a solution of

$$X^2 - 23Y^2 = 1,$$

then

$$x = x_1X_k + 23y_1Y_k \quad \text{and} \quad y = x_1Y_k + y_1X_k$$

is also a solution of equation (2). This guarantees that equation (1) has an infinite number of solutions because equation (2) does also. A few more of these solutions are $x = 892$, $y = 186$ (so $n = 880$); $x = 1362$, $y = 284$ (so $n = 1350$); $x = 42798$, $y = 8924$ (so $n = 42786$); and $x =$

65348, y = 13626 (so n = 65336). Thus

$$7^2 + 8^2 + \cdots + 29^2 = 92^2$$
$$17^2 + 18^2 + \cdots + 39^2 = 138^2$$
$$881^2 + 882^2 + \cdots + 903^2 = 4278^2$$
$$1351^2 + 1352^2 + \cdots + 1373^2 = 6532^2$$
$$42787^2 + 42788^2 + \cdots + 42809^2 = 205252^2$$
$$65337^2 + 65338^2 + \cdots + 65359^2 = 313398^2$$

Also solved by Daniel W. Keefe, Efstathios Mexas and William D. Nolte, Jr., all students at Mount Mercy College, Cedar Rapids, Iowa.

Editor's Comment: Keefe, Mexas and Nolte used computer programs to find the first three solutions found in our featured solution while Mexas and Nolte found a fourth solution.

Equation (2) in the featured solution has an infinite number of solutions which are given by the relations

$$X_k + \sqrt{23}\, Y_k = \left(X_0 + \sqrt{23}\, Y_0 \right)^k$$

where X_0, Y_0 is the fundamental solution of the equation

$$X^2 - 23Y^2 = 1.$$

See [2]. Here $X_0 = 24$ and $Y_0 = 5$.

[1] Adams and Goldstein, *Introduction to Number Theory*. Prentice Hall, Inc., Englewood Cliffs, New Jersey (1976), 182.
[2] Underwood Dudley, *Elementary Number Theory*. W. H. Freeman and Co., San Francisco (1969), 153.

Problem 416: Proposed by the editor. Find r and s such that $rx^{15} - sx^{14} + 1$ is divisible by $x^2 - x - 1$.

Solution by Richard A. Gibbs, Fort Lewis College, Durango, Colorado.

The zeros of $x^2 - x - 1$ are $r_1 = (1 + \sqrt{5})/2$ and $r_2 = (1 - \sqrt{5})/2$ and the nth Fibonacci number F_n is given by

$$F_n = \left(r_1^n - r_2^n\right)/\sqrt{5} \ .$$

Now for $rx^{15} - sx^{14} + 1$ to be divisible by $x^2 - x - 1$, we must have

$$r \cdot r_1^{15} - s \cdot r_1^{14} + 1 = 0 = r \cdot r_2^{15} - s \cdot r_2^{14} + 1.$$

Solving this system of equations for r and s yields

$$r = \left(r_1^{14} - r_2^{14}\right)/\sqrt{5} = F_{14} = 377$$

and

$$s = \left(r_1^{15} - r_2^{15}\right)/\sqrt{5} = F_{15} = 610.$$

Also solved by Bob Prielipp, University of Wisconsin-Oshkosh, Oshkosh, Wisconsin; and Charles Ashbacker, Mount Mercy College, Cedar Rapids, Iowa.

Editor's Comment: Another (but equivalent) approach to this problem is to notice that for each root of $x^2 - x - 1$, we have

$$x^k = x^{k-1} + x^{k-2}.$$

Then by repeatedly applying this relationship, we find that $rx^{15} - sx^{14} + 1$ reduces to

$$(F_{15}r - F_{14}s)x + (F_{16}r - F_{15}s) + 1 = 0.$$

Here the left side of the equation must vanish which leads to the same solution as found above.

Problem 417: Proposed by the editor. Find two or more positive integers k such that 3^k terminates in k or show that none exist.

Computer solutions were submitted by Daniel W. Keefe, Efstathios Mexas and William D. Nolte, Jr., all students at Mount Mercy College, Cedar Rapids, Iowa. All three found the two values $k = 7$ and $k = 87$ which satisfy the requirement that 3^k ends in k. Keefe found the additional value $k = 387$ while Nolte extended the list by discovering that $k = 5387$ also meets the requirements of the problem. Basically each program generated powers of 3 and compared the value of the exponent with the terminal digits of the decimal expansion by using appropriate congruences.

Editor's Comment: Let k_n denote the value of k having n digits. For n =

7, $k_7 = 4195387$ with smaller values of k_n being found by successive deletions of digits starting from the left. Such numbers are called expomorphic numbers. The basic theorem concerning this subject has been completely resolved only recently and can be stated as:

Theorem. Let b and n be given positive integers with $n \geq 2$ and $b \nmid 10$. Then (1) there exists exactly one n-digit number k_n which is expomorphic to the base b; and

$$k_{n+1} \equiv b^{k_n} \pmod{10^{n+1}}. \tag{2}$$

This result allows k_n to be computed inductively once an initial value has been found. For more information on a related problem, see *Crux Mathematicorum* 7 (October 1981), 192 and 13 (October 1987), 291.

Problem 418: Proposed by the editor. Consider the sets {1}, {4,9,16}, {25,36,49,64,81}, {100,121,144,169,196,225,256}, ... in which each set contains two more consecutive squares than the preceeding set. Find a formula for the sum of the members of the nth set.

Solution by Brad Welch, Southwest Missouri State University, Springfield, Missouri. (Revised by the editor.)

The nth set contains 2n-1 squares and the last number in the nth set is the square of the integer n^2. Hence the first term of the nth set is the square of the integer $n^2 - 2n + 2$. Then using the familiar formula

$$1^2 + 2^2 + \cdots + k^2 = \frac{1}{6}\Big(k(k+1)(2k+1)\Big),$$

we have

$$\sum_{k=1}^{n^2} k^2 - \sum_{k=1}^{(n-1)^2} k^2$$

$$= \frac{1}{6}\Big(n^2(n^2+1)(2n^2+1) - (n^2-2n+1)(n^2-2n+2)(2n^2-4n+3) \Big)$$

$$= \frac{1}{3}\Big((2n-1)(3n^4 - 6n^3 + 10n^2 - 7n + 3) \Big).$$

Also solved by Bob Prielipp, University of Wisconsin-Oshkosh, Oshkosh, Wisconsin.

Kappa Mu Epsilon News

Edited by Mary S. Elick, Historian

News of chapter activities and other noteworthy KME events should be sent to Professor Mary S. Elick, Historian, Kappa Mu Epsilon, Mathematics Department, Missouri Southern State College, Joplin, MO 64801.

CHAPTER NEWS

Alabama Gamma University of Montevallo, Montevallo
Chapter President - Lisa Wattington
6 actives, 16 initiates

Other 1989-90 officers: Lori Sims, vice president; Julie Higgins, secretary; Lisa Land, treasurer; Gene G. Garza, corresponding secretary; Angela Hernandez, faculty sponsor.

Alabama Zeta Birmingham - Southern College, Birmingham
Chapter President - Ashita Tolwani
35 actives

The Kappa Mu Epsilon Award for service to the chapter was presented to Anamaria Yossif Vickery on Honors Day. Other 1989-90 officers: Mark Kent, vice president; Allison Jones, secretary; Julie Jones, treasurer; Lola F. Kiser, corresponding secretary; Shirley Branan, faculty sponsor.

California Gamma California Polytechnic State University, San Luis Obispo
Chapter President - Theresa Bly
40 actives, 16 initiates

As in past years California Gamma held its Annual Booksale in January. Formerly, this was a one-day fundraiser. However, it was extended to two days in 1988 and, due to the success of this innovation, it was scheduled for two days in 1989. Each March/April our chapter assists the Mathematics Department in the preparation and conduct of the campus Open House known as Poly Royal. This activity again consumed much of our time and planning. The School of Science and Mathematics (SOSAM) initiated a new program designed to encourage underrepresented eighth graders to prepare for college and to consider science and mathematics or related fields as a career. The program, called SMART (an acronym for "Science and Mathematics are Really Terrific") was developed by the School's Educational Equity Committee

and began with a full-day visit by 100 8th graders from two nearby junior high schools. Volunteers from KME and other student organizations assisted Cal Poly faculty in the conduct of special classes, group activities and in guiding the visitors around campus. Plans include bringing a new group of 100 each year on campus for two full-day visits with follow-up site visits and parent meetings. KME will offer its time and effort to this program as requested. On April 21, 1989, SOSAM held its Annual Banquet. Susan Blue and Anna Heimgartner received Academic Achievement Awards (i.e. were in the top 5% of the seniors in SOSAM). Denise Tobias received both an Academic Achievement Award and a University Award for her remarkable involvement in the School and University. Kappa Mu Epsilon itself received one of the three Outstanding Club Awards. The Banquet was attended by more than 150 persons. On May 5, 1989, California Gamma held its own Annual Banquet. W. Boyd Judd presented the University Scholarship which bears his name to John Yip. Susan Miller presented the Arthur Anderson Professional Performance Award to Rachel Jeffries. Adelaide Harmon-Elliott, former KME Advisor, presented the Founders' Award to Joni Otoshi. The invited address was delivered by Nancy Monson of Lawrence Livermore Laboratory (Livermore, CA). The Mathematics Department held a barbecue on May 12, 1989, to express its appreciation to those who helped the Department during Poly Royal. Numerous KME members were present. On May 26, 1989, KME held its Annual Barbecue, which was well attended by faculty of the Mathematics, Statistics and Computer Science Departments. Other 1989-90 officers: Rachel Jeffries and Chris Lucke, vice presidents; Nicholas Braito, secretary; Anne Patton, treasurer; Raymond D. Terry, corresponding secretary/faculty sponsor.

California Delta — California State Polytechnic University, Pomona
Chapter President - Diane Barrett
30 actives, 10 initiates

California Delta studied applied mathematics during a trip to Las Vegas this spring. In other activities, members enjoyed a spring picnic and a beach party, and were unbeaten in their intramural softball league. Other 1989-90 officers: Michelle Stratton, co-president; Mary Tauer, secretary/treasurer; Dick Robertson, corresponding secretary; J. S. Sportsman, faculty sponsor.

Colorado Gamma — Ft. Lewis College, Durango
Chapter President - Larry Hansen
20 actives, 14 initiates

The high school tutoring program was continued throughout the spring. David Beazley, Deloria Chapo, Earl Edwards, Jeff Johnson, Jessica Logan, and Professor Richard Gibbs attended the biennial convention in Topeka and had a great time. Other 1989-90 officers: Terry Sherfey, vice president; David Beazley, secretary; Kevin Marushack, treasurer; Richard Gibbs, corresponding secretary/faculty sponsor.

Georgia Alpha — West Georgia College, Carrollton
Chapter President - Vicki Shackelford
20 actives, 12 initiates

Georgia Alpha's fifteenth initiation ceremony on May 31 included the initiation of twelve new pledges and the election of next year's officers. During the reception which followed, the 1989 Marion Crider Scholarship was awarded to Anita Able and the 1989 David Cooley Scholarship was awarded to Jeff Cordle. Both Anita and Jeff are active members of KME. Other 1989-90 officers: Luqmanul Thayyil, vice president; Stephanie Edge, secretary; Doug Teate, treasurer; Joe Sharp, corresponding secretary/faculty sponsor.

Illinois Beta — Eastern Illinois University, Charleston
Chapter President - Jacqui Sheehan
36 actives, 16 initiates

Programs at the regular Math Club/KME meetings featured a representative from State Farm Insurance in February and a talk and demonstration on Maples by Duane Broline in March. Chapter members toured Argonne in April. Additional activities included a book sale, a spring picnic, KME initiation and the KME Honors Banquet. Other 1989-90 officers: Cecile Knizner, vice president; Tammie Traub, secretary; Jason Smith, treasurer; Lloyd Koontz, corresponding secretary and faculty sponsor; Allen Davis, faculty sponsor.

Illinois Delta — College of St. Francis, Joliet
Chapter President - David Laketa
20 actives, 12 initiates

In conjunction with College of St. Francis education department, Illinois Delta sponsored a conference featuring David R. Johnson, author of Making Minutes Count. Math faculty from surrounding elementary and secondary schools, as well as students and faculty from College of St. Francis math and education departments were in attendance. A total of 250 were present. Other 1989-90 officers: Debra Becker, vice president; Michelle Safiran, secretary; Donna Guderyahn, treasurer; Sister Virginia

McGee, corresponding secretary/faculty sponsor.

Illinois Zeta — Rosary College, River Forest
Chapter President - Glenn Jablonski
25 actives, 18 initiates

Other 1989-90 officers: Keith Izban, vice president; Annette Antos, secretary; Nancy Christensen, treasurer; Sister Mary T. O'Malley, corresponding secretary/faculty sponsor.

Illinois Eta — Western Illinois University, Macomb
Chapter President - Kristen Sweedy
5 actives, 8 initiates

The group visited Bradley University in Peoria, IL and attended the talk by Paul Halmos "Anyone Can Learn to Solve Problems, But Who Can Learn to Think?" Christie Cooksey presented a program on her interview for an internship in industry and Larry Morley presented a program entitled "Finding Complex Zeros of Polynomial Functions Graphically." Three of the members attended the Student Paper Session of ISMAA and have made plans to work on a presentation next year. Initiation of new members and the election of officers for 1989-90 was held on April 24, 1989. Other 1989-90 officers: Dennis Lucas, vice president and treasurer; Jeffrey French, secretary; Larry Morley, corresponding secretary; Kent Harris, faculty sponsor.

Illinois Theta — Illinois Benedictine College, Lisle
Chapter President - Heng Ly
12 actives, 7 initiates

Regular meetings were held monthly during the spring semester. In addition, the organization participated weekly in a problem seminar with the mathematics faculty. Chapter members helped organize and administer a high school math contest on February 18 and organized an awards, speaker and induction banquet at the end of the semester. The chapter attended a mathematics seminar on March 15; the talk was on the mathematics of cipher systems. Other officers for 1989-90: Debbie Legan, vice president; Beth Trupiano, secretary; Richard Giza, treasurer; James Meehan, corresponding secretary/faculty sponsor.

Indianna Gamma — Anderson University, Anderson
Chapter President - Lisa Rozevink
12 actives, 4 initiates

Students were honored by the department with a luncheon during

the spring semester. Other 1989-90 officers: Melanie Dahler, vice president; Linda Timmerman, secretary/treasurer: Stanley Stephens, corresponding secretary/faculty sponsor.

Iowa Alpha University of Northern Iowa, Cedar Falls
Chapter President - Lori Stenberg
43 actives, 5 initiates

Iowa Alpha students Suzanne Buckwalter, Julie Holdorff, Bill Kruse, Bill Pothoff, Kerris Renken, and Lori Stenberg, along with faculty John S. Cross and John C. Longnecker, attended the KME National Convention April 6-8, 1989 at Washburn University in Topeka, KS. Julie Holdorff presented her paper on "Numerical Integration" to the Convention. Professor Emeritus Fred W. Lott from Iowa Alpha Chapter received the George R. Mach Distinguished Service Award. Students presenting papers at local KME meetings included Lynn Cairney on "Tribonacci Numbers" and Michael Hirsch on "General Matrix Inverses." On May 2 Suzanne Buckwalter addressed the initiation banquet on "The Hyperreals." Other 1989-90 officers: Lynn Cairney, vice president; Jodi Barrick and Mark Bohan, secretary; Bill Pothoff, treasurer; John S. Cross, corresponding secretary/faculty sponsor.

Iowa Delta Wartburg College, Waverly
Chapter President - Kaaren Hemmingson
31 actives, 15 initiates

The January meeting of the Iowa Delta Chapter featured an introduction and computer demonstration of fractals by Professor Josef Breutzmann. Chapter members enjoyed a pizza party and fellowship at the February meeting. On March 11 the Chapter co-sponsored with the Mathematics and Computer Science Department the 12th Annual Wartburg Mathematics Field Day in which one hundred and four students participated representing fourteen high schools. Fifteen new members were initiated into the Iowa Delta Chapter at the Initiation and Election Banquet held on April 1. David Zelle, a 1977 Wartburg graduate and past Iowa Delta Chapter President, spoke at the Banquet on the topic "Mathematics: Perspiration, Aspiration and Inspiration." The annual May Term picnic was held on May 8. Other 1989-90 officers: Diane Waltmann, vice president; Kent Hicok, secretary; Susan Olson, treasurer; August W. Waltmann, corresponding secretary; Glenn Fenneman, faculty sponsor.

Iowa Gamma Morningside College, Sioux City
7 actives

Iowa Gamma has only 1 returning member for Fall '89 and no new initiates, but plans for a new start next spring are underway according to Steve Nimmo, math department member.

Kansas Alpha — Pittsburg State University, Pittsburg

Chapter President - Mala Renganathan
40 actives, 11 initiates

The spring semester began with initiation for eleven new members. Following the initiation ceremony, Dr. Bruce Daniel, PSU Physics Department, presented the program which was a special show in the university planetarium. Dr. Gary McGrath, PSU Mathematics Department, gave a talk for the March meeting entitled, "Ill-Conditioned Matrices." The April meeting gave Mala Renganathan an opportunity to give her paper which was presented then at the National Convention at Washburn University: "Application of Number Theory: Cryptosystems." Six students and three faculty represented Kansas Alpha at the Washburn Convention. Dr. Thomas, Corresponding Secretary for Kansas Alpha, was installed as National President at the convention. The chapter assisted the Mathematics Department Faculty in administering and grading tests given at the annual Math Relays, April 25, 1989. Several members also worked for the Alumni Association's Annual Phon-o-thon. They received 1st prize for amount of money raised by student organizations. The final meeting of the semester was a social event held at Professor McGrath's home. Homemade ice cream and cake were served to those attending. Officers for the 1989-90 school year were elected. The annual Robert M. Mendenhall award for scholastic achievement was presented to Pat Robertson. He received a KME pin in recognition of this honor. The students also honored Dr. Helen Kriegsman, Mathematics Department Chairman and KME Faculty Sponsor, who is retiring this year. She was given a plaque citing her 42 years of service to PSU and KME. The evening's program was given by Jennifer Munson. She showed a video tape ,entitled, "A Mathematical Mystery Tour." Other 1989-90 Officers: Lora Woodward and Mike Wille, co-vice presidents; Tamala Nation, secretary; Lori Oneal, treasurer; Harold L. Thomas, corresponding secretary; Gary L. McGrath, faculty sponsor.

Kansas Epsilon — Fort Hays State University, Hays

23 actives, 3 initiates

The semester activities included monthly meetings, the annual spring initiation and picnic in April, and a bowling party in late April. Officers for 1989-90 have not been elected. Charles Votaw serves as corresponding secretary and Mary Kay Schippers is the faculty sponsor.

Kentucky Alpha Eastern Kentucky University, Richmond
Chapter President - Kathy Ponder
15 actives, 24 initiates

The major event of the semester was preparing for and attending the national convention. In order to raise money for the trip, we sold chocolate kisses on Valentine's Day and candy bars throughout the semester. At the beginning of the semester, twelve students tentatively said they wanted to attend the convention; however, only four of them actually went. We had a good time! It was a quick trip out, but a more leisurely trip home with a nice stop in St. Louis to see the Arch. On several sundays during the semester, faculty and students played some exciting games of volleyball. On April 26th, KME and ACM students took a tour of the IBM facilities in Lexington. This year's initiation ceremony included an informative and entertaining talk by Dr. Don Greenwell on "The Chromatic Number of Graphs." The traditional party afterwards was held in the student center on campus. Other 1989-90 officers: Harry Collins, vice president; Kathy Engel, secretary; Cathy Mason, treasurer; Patrick Costello, corresponding secretary; Bill Janeway, faculty sponsor.

Maryland Delta Frostburg State University, Frostburg
Chapter President - Andrew Kaylor
30 initiates

Activities during spring 1989 included a guess - the - number - of - pennies - in - the - jar contest, an abacus demonstration, a math puzzlefest, and co-sponsorship of the nineteenth annual Frostburg State University Mathematics Symposium. On March 12, 1989, the following new members were inducted into the chapter: Mark Amoruso, Gregory Bernhard, Paul Browning, Paul Duty, Karen Ensminger, Linda Heithoff, Andrew Kaylor, Fred Miller, Brenda Moore, Wendy Moser, Jill Nelson, Grant Ryan, James Stegmaier, Stevyn Travillian, P. Jay Zeltner. Officers for spring 1989 were President Christa White, Vice President Wendi Johnson, Secretary Michele Glotfelty and Treasurer Marnie Ross. Other 1989-90 officers: Brenda Moore, vice president; James Stegmaier, secretary; Paul Duty, treasurer; Edward White, corresponding secretary; John Jones, faculty sponsor.

Michigan Beta Central Michigan University, Mount Pleasant
Chapter President - Nancy Haskell
42 actives, 13 initiates

Activities of the spring semester included a bowlathon fundraiser,

viewing videos from the TV mathematical series, "For All Practical Purposes," and a spring picnic. Arnold Hammel gave a talk on "Finite Differences and Large Systems of Linear Equations" and Evich Hauenstein spoke on "Games and Puzzles in Elementary School Mathematics." The speaker for the spring initiation was Professor Richard Fleming, chairperson of mathematics at CMU, who spoke on his recent sabbatical to Scotland. Other 1989-90 officers: David Richmond, vice president; Sandra Schmoldt, secretary; Karen Wamsley, treasurer; Arnold Hammel, corresponding secretary/faculty sponsor.

Mississippi Alpha — Mississippi University for Women, Columbus
Chapter President - Troy Lewis
16 actives

Other 1989-90 officers: Sean Hayes, vice president; Elizabeth Doll, secretary/treasurer; Jean Ann Parra, corresponding secretary; Carol B. Ottinger, faculty sponsor.

Mississippi Gamma — University of Southern Mississippi, Hattiesburg
Chapter President - Beth Page
27 actives, 13 initiates

The students competing for this year's KME Freshman Math Award were Joy Leigh Adams, Barry Irving Barker, Latouisha M. Gasaway, Clark J. Jefcoat, Robert Gregory Moreland, and Gabriel Joseph Shoemaker. Barry Barker scored the highest on the exam and was presented the award at the University's Awards Day on April 13, 1989. The spring initiation and cook out was held on April 15 at Lake Sekoy. Other 1989-90 officers: Patsy Saucier, vice president; Cassandra Pursley, secretary/treasurer; Alice Essary, corresponding secretary; Barry Piazza and Karen Fawcett, co-faculty sponsors.

Missouri Alpha — Southwest Missouri State University, Springfield
Chapter President - Paul Scott
45 actives, 14 initiates

Three regular meetings were held during the spring semester. Programs included faculty talks, student papers, and presentation of the solution to a problem from the Pentagon. Six students, one a paper presenter, and one faculty member attended the national convention. Eight outstanding freshman mathematics students were recognized at the spring banquet which was attended by approximately 45 students, faculty, and guests. Other 1989-90 officers: Ann Schlemper, vice president; Deanna Wasman, secretary; D. Anne Watters, treasurer; Vera

Stanojevic, corresponding secretary; M. Michael Awad, faculty sponsor.

Missouri Beta — Central Missouri State University, Warrensburg
Chapter President - Lisa Vinyard
7 actives, 5 initiates

Missouri Beta Chapter had three regular business meetings during the spring semester of 1989. The programs at these meetings featured our own faculty. Topics presented were spirals and quasi-spirals, and computer graphing, problems and solutions. The Klingenberg lecturer was Ellen Thompson, a CMSU graduate and presently employed with IBM. She spoke on IBM's work with optic input, storage and manipulation. Service activities for the students of Missouri Beta included manning the math clinic (a free tutoring service) and helping during the Math Relays. Four students attended the national convention in Topeka, April 6-8. The annual spring banquet was also held in April. The final activity this spring had students pitted against the faculty in the yearly volleyball challenge. Other 1989-90 officers: Sylvia Garcia-Curran, vice president; Christie Lundy, secretary; Rick McBride, treasurer; Homer Hampton, corresponding secretary; Larry Dilley, faculty sponsor.

Missouri Gamma — William Jewell College, Liberty
Chapter President - Ty Abbott
14 actives, 11 initiates

Regular monthy meetings were held the second Monday of each month. Presentations enjoyed by members included a talk by a high school mathematics teacher on challenging problems for high school students and an address by an actuary on the field of actuarial science. The spring initiation ceremony and banquet were held on Tuesday, April 4, 1989. Eleven new members were inducted. Other 1989-90 officers: Kevin Tanner, vice president; Catherine Pagacz, secretary; Joseph Mathis, treasurer; Joseph Mathis, corresponding secretary; Joseph T. Mathis, faculty sponsor.

Missouri Epsilon — Central Methodist College, Fayette
Chapter President - William Crowe
14 actives, 6 initiates

Other 1989-90 officers: Shelia Tuley, vice president; Joy Powell, secretary/treasurer; William D. McIntosh, corresponding secretary and faculty sponsor; Linda O. Lambke, faculty sponsor.

Missouri Eta — Northeast Missouri State University, Kirksville

Chapter President - Wesley Clifton
29 actives, 2 pledges

Four senior presentations were given. Topics included "The Role of Statistics in Psychology," "The NCTM Standards: Their Impact on College Mathematics Education," "The Statistics of Statistics," and "The Ladder Problem." Our annual MATH EXPO was held in February. This is a contest for high school students. Other 1989-90 officers: David Smead, vice president; Julie Ridlen, secretary; John DeKeergiester, treasurer; Mary Sue Beersman, corresponding secretary; Mark Faucett, faculty sponsor.

Missouri Theta — Evangel College, Springfield

Chapter President - Sarah Winslow
5 actives, 7 initiates

During the spring semester the organization met for monthly meetings, two student presentations were made and a social get-together was held. The chapter attended a talk given at Southwest Missouri State University in Springfield and two members attended the national convention in Topeka. Other 1989-90 officers: Don Tosh, corresponding secretary/faculty sponsor.

Missouri Iota — Missouri Southern State College, Joplin

Chapter President - Bill Elliott
12 actives, 6 initiates

Seven students and two faculty members attended the national convention in Topeka, Kansas, April 6-8. Two students presented papers. John Day talked on "Fun with Planes" and Susan Paulsen spoke on "Underwater Mathematical Modeling." Robert Stokes' paper "The Cutting Edge," was listed as an alternate. Paulsen's paper won third place in the paper competition. At the convention faculty member Mary Elick was elected national historian. Other semester activities included regular meetings with programs presented by faculty and students, the annual spring initiation banquet, and the year end cook out at Mrs. Elick's house. Other 1989-90 officers: Hsiao-Hui Lin, vice president; Vince Sprenkle, secretary/treasurer; Mary Elick, corresponding secretary; Linda Hand, faculty sponsor.

Missouri Kappa — Drury College, Springfield

Chapter President - Scott Steubing
13 actives, 4 initiates

Text books collected from faculty were sold as a fund raiser. Initiation was held in February for Dawn Mrad, Matt Redd, James Rutan, and Monty Towe. A social event followed the initiation. The chapter made a trip to Southwest Missouri State University to hear talks by Scott Steubing, Missouri Kappa, and Sherri Renegar, Missouri Alpha. The highlight of the semester was the trip to the national convention at Washburn University in Topeka, Kansas. Jay Swartz presented the paper, "A Piece of Pie," written by Scott Steubing. Other 1989-90 officers: Laura De Nouden, vice president; Monty Towe, secretary; James Rutan, treasurer; Charles Allen, corresponding secretary; Ted Nickle, faculty sponsor.

Nebraska Alpha — Wayne State College, Wayne

Chapter President - Keith Spiehs
38 actives, 15 initiates

Throughout the spring semester Nebraska Alpha monitored the Math-Science Building evenings as a money-making project. Cyndi Savage of Shelton, Iowa was named outstanding freshman mathematics student as result of her performance on an exam administered by the chapter. The award includes the recepient's name being engraved on a permanent plaque, payment of KME national dues, one year honorary membership in the local KME chapter, and announcement of the honor at the annual spring Builder's Banquet. Rusty Sadles was awarded the $25.00 book scholarship which is given to a KME member each semester. Members Brenda Spieker, Julie Moffitt, Noland Axford, Keith Spiehs, Lee Emanuel, Rusty Sadler, Darin Moon, Earl von Rentzell, Rory Rut, and faculty member John Fuelberth attended the national KME convention at Washburn University in Topeka, Kansas, April 6, 7, 8, 1989. Keith Spiehs served on the Awards Committee. In other activites, club members were in charge of obtaining a speaker for the Building Banquet, assisted the college mathematics faculty with the Fifteenth Annual W.S.C. Mathematics Contest on May 8, 1989, participated in Wayne State College College-Bowl, kept the bulletin board current, and sponsored social functions for members and guests. Other 1989-90 officers: Lee Emanuel, vice president; Paula Gustafson, secretary/ treasurer; Brenda Spieker, historian; Fred Webber, corresponding secretary; James Paige, faculty advisor.

Nebraska Gamma — Chadron State College, Chadron

Chapter President - Kim Sedlacek
15 actives, 4 initiates

Eight chapter members attended the NCTM Conference held in

Omaha. Two students, accompanied by the corresponding secretary, represented Nebraska Gamma at the KME national convention in Topeka, Kansas. The chapter was also represented at the Nebraska Academy of Sciences in Lincoln, NE. Kevin Anderson, Laura Dooley, Chris Geary and Marla Soester were all spring initiates. Other 1989-90 officers: Michelle Dodd, vice president; Pat Reilly, secretary; Betty Rudnick, treasurer; James Kaus, corresponding secretary; Monty Fickel, faculty sponsor.

Nebraska Delta — Nebraska Wesleyan University, Lincoln
Chapter President - Cheryl Olsen
16 actives, 13 initiates

In February Nebraska Delta sponsored a Computer Matchup before Valentines Day as a fund raiser. On April 8, 1989, we held our annual High School Mathematics and Computer Contest for area high school students. Initiation of new members was held in conjunction with the annual spring picnic at the home of Professor Wampler. Other 1989-90 officers: Michael Mead, vice president; Mary Rose Philpot, secretary; Terry Bierman, treasurer; Muriel Skoug, corresponding secretary; Daniel Kaiser, faculty sponsor.

New Mexico Alpha — University of New Mexico, Albuquerque
Chapter President - David Anderson
25 actives, 17 initiates

Other 1989-90 officers: Lisa Garcia, vice president; Mark Andrews, secretary; Joe McCanna, treasurer; Richard Metzler, corresponding secretary/faculty sponsor.

New York Alpha — Hofstra University, Hempstead
12 actives, 3 initiates

During the spring semester New York Alpha heard Robert Sackel speak on "Careers in Actuarial Science" and Dr. Steven Costenoble lecture on "The Proof of the Fundamental Theorem of Algebra." The organization also sponsored a volley ball game and the math department picnic. Officers for next year have not yet been elected.

New York Eta — Niagara University, Niagara University
15 actives, 5 initiates

The annual chapter banquet and initiation was held April 15, 1989. Mr. Henry Liana (Class of '73) of Kodak in Rochester, NY spoke to the group. His topic was "Making a Living: The Human Equation." Officers

for 1989-90 will be elected in the fall of 1989. Robert Bailey is corresponding secretary.

New York Lambda C. W. Post Center/Long Island University, Brookville
Chapter President - Lauren Henneberger
39 actives, 19 initiates

New York Lambda held a spring initiation ceremony at a nearby restaurant. Kevin O'Reilly delivered a talk based on the paper he presented at the national meeting. Other activities included a late spring bar-b-que. Additional 1989-90 officers: Ahmed Samatar, vice president; Cynthia Ferro, secretary; Christopher Kelly, treasurer; Sharon Kunoff, corresponding secretary; Andrew Rockett, faculty sponsor.

Ohio Alpha Bowling Green State University, Bowling Green
Chapter President - Ty Damon
42 initiates

Other 1989-90 officers: Debra Dean, vice president; Jennifer Laveglia, secretary; Marina Lauengco, treasurer; Waldemar Weber, corresponding secretary; Thomas Hern, faculty sponsor.

Ohio Zeta Muskingum College, New Concord
Chapter President - Toni St. Clair
32 actives, 7 initiates

Ohio Zeta heard talks by new members in January. In early February members gathered for a popcorn-making party; the popcorn was later sold as caramel corn to raise money for the organization. On February 27, the banquet/induction of new members was held. New members' talks and convention papers were presented before the chapter in early April. Nine students and one faculty attended the national KME convention in Topeka April 6-8. Gina Dolick presented her paper, "Abracadabra! Pascal's Triangle," at the convention. Members enjoyed a year-end picnic at the Smith's home. Other 1989-90 officers: Monica Gibson, vice president; Jennifer Suschil, secretary; Cari Fusco, treasurer; James L. Smith, corresponding secretary; Javad Habibi, faculty sponsor.

Oklahoma Alpha Northeastern State University, Tahlequah
Chapter President - Shelli Phillips
42 actives, 6 initiates

This spring the Oklahoma Alpha chapter sponsored a talk by Dr. John Wolfe of Oklahoma State University. His talk was "How close is sin x to a polynomial?" The spring '89 initiation ceremonies for six students

were held in the banquet room of the Sirloin Stockade restaurant in Tahlequah. Dr. A. C. Nunley was honored as the KME mathematics teacher of the year and Michelle Harper as the KME mathematics student of the year. Michelle received a KME pin and Dr. Nunley a plaque in recognition of these honors. During Mathematics Awareness Week, math majors and math and science faculty were invited to a showing of a film on mathematics education, which was followed by the annual ice cream social. Other 1989-90 officers: Albert Peters, vice president; Mike O'Keefe, secretary/treasurer; Joan E. Bell, corresponding secretary/faculty sponsor.

Oklahoma Gamma Southwestern Oklahoma State University, Weatherford
Chapter President - Glenn Mitchell
20 actives, 13 initiates

Four students and two faculty members attended the national convention in Topeka. Other 1989-90 officers: Kathy Logan, vice president; Kristen Casebeer, secretary; Darin Puritan, treasurer; Wayne Hayes, corresponding secretary; Robert Morris, faculty sponsor.

Pennsylvania Alpha Westminister College, New Wilmington
Chapter President - Matthew Mrozek
27 actives, 12 initiates

Members continued to tutor all levels of mathematics for any student on each Wednesday of the term. The chapter sponsored three speakers to present career talks at the annual mathematics and computer science banquet in April. Other 1989-90 officers: David Chapnell, vice president; Christy Heid, secretary; Kim Hoener, treasurer; J. Miller Peck, corresponding secretary; Warren D. Hickman, faculty sponsor.

Pennsylvania Delta Marywood College, Scranton
Chapter President - Mary Frances Zelenak
2 actives, 11 initiates

Spring semester activities of Pennsylvania Delta included co-sponsoring of the annual high school math contest and attendance by three members at the regional NCTM meeting in Boston, MA. Other 1989-90 officers: Joseph Perri, vice president; Anne Undercoffler, secretary; Vittoria Mercaldo, treasurer; Sister Robert Ann von Ahnen, corresponding secretary.

Pennsylvania Theta Susquehanna, Selinsgrove
Chapter President - J. Cooper Altmiller

19 actives, 4 initiates

Activities of the spring semester included a dinner initiation of new members and a pizza party at which the election of new officers took place. Other 1989-90 officers: JoAnn Gursky, vice president; Janice Gessner, secretary; Donna Podoletz, treasurer; Carol Harrison, corresponding secretary; Karl Klose, faculty sponsor.

Pennsylvania Kappa — Holy Family College, Philadelphia
Chapter President - Vincent Frascatore
15 actives, 6 initiates

Meetings were held every third Thursday of the month. Challenging problems were discussed and solved. Free tutoring was provided by members. In conjunction with spring initiation ceremonies, former Holy Family math majors Mary McFadden-Lutz ('62) and JoAnn Dellavalle ('75) spoke to those present. In addition, Sister Marcella Louise, a 1977 graduate, presented a talk on Mathematical Modeling. Activities concluded with a pizza party. Other 1989-90 officers: Lori Fischer, vice president; Claire Marie Whelan, secretary/treasurer; Sister M. Grace Kuzawa, corresponding secretary.

Pennsylvania Lambda — Bloomsburg University, Bloomsburg
Chapter President - Tom Rogers
30 actives, 10 initiates

Members of the chapter organized and staffed a twice-weekly math help session during the spring semester. Five students and two faculty attended the national convention in Topeka. Lee Chasen presented a paper entitled "Pattern Duplication and Reflection: A Bouncing Ball Problem." Other 1989-90 officers: Karen Cressman, vice president; Leann Schrann, secretary; Chris Case, treasurer; Jim Pomfret, corresponding secretary; John Riley, faculty sponsor.

Pennsylvania Nu — Ursinus College, Collegeville
Chapter President - Pearl Anderson
13 Actives, 7 initiates

In February, chapter members heard a presentation by Jeff Neslen of Ursinus College entitled the "The Sylow Theorems" and a lecture by Dr. Paul Wolfson of West Chester University on "Recent Developments in the Philosophy of Mathematics." Professor Wolfson was selected from a list of available speakers provided by the EPADEL section of the Mathematical Association of America. His talk was cosponsored by Sigma Xi, Ursinus College Club. Initiation of new members was held in

March, and in April Dr. James H. Fife of Ursinus College addressed the organization on the topic "Higher Order Products in the Steenrod Algebra." Professor Fife's talk was preceded by the presentation of this year's student prizes. Other 1989-90 officers: Connie Newell, vice president; Susan Delaney, secretary; Karen Williams, treasurer; Jeff Neslen, corresponding secretary; Richard BreMiller, faculty sponsor.

Tennessee Alpha — Tennessee Technological University, Cookeville
Chapter President - Doug Talbert
20 actives, 42 initiates

Michael Allen presented his paper, "The Probabilities of a Craps Game," before the members of the Tennessee Alpha Chapter. Subsequently, he won second place for his presentation at the national convention in Topeka, Kansas. Forty-two new pledges were inducted at an initiation picnic May 23. Other 1989-90 officers: Pete Howard, vice president; Usha Munukatta, secretary; George Grahmam, treasurer; Frances Crawford, corresponding secretary; Edmund Dixon, faculty sponsor.

Tennessee Beta — East Tennessee State University, Johnson City
Chapter President - Wendy Allen
12 actives, 15 initiates

Tennessee Beta inducted 15 new members during its annual spring initiation April 14, 1989. The initiation ceremonies were conducted by Wendy Allen, Nelle Gobble, and Cecilia Ward. Following the initiation banquet Dr. Jerry Nagel gave a talk entitled "The Fall of Man." In other activities, Sheri White received the award for the outstanding graduating mathematics student. Other 1989-90 officers: C. Nelle Gobble, vice president; Terry Frazier, secretary; Lyndell Kerley, corresponding secretary/faculty sponsor.

Tennessee Gamma — Union University, Jackson
Chapter President - Patricia Leach
21 actives, 12 initiates

Other 1989-90 officers: Joseph Duffey, vice president; Malissa Meadows, secretary; Karen Northam, treasurer; Don Richard, corresponding secretary; Dwayne Jennings, faculty sponsor.

Tennessee Delta — Carson-Newman College, Jefferson City
Chapter President - Jenny L. Crutchfield
25 actives, 8 initiates

Spring activities included the initiation banquet at Little Dutch Restaurant in Morristown, TN, and a picnic at Panther Creek State Park, also of Morristown. Other 1989-90 officers: Kimberly J. Caldwell, vice president; Jeffrey L. Holmes, secretary; W. Keith Repass, treasurer; Verner T. Hansen, corresponding secretary; Carey R. Herring, faculty sponsor.

Texas Alpha — Texas Tech University, Lubbock
Chapter President - Nancy Lacey
20 actives, 21 initiates

Meetings were held monthly with the primary activity being that of taking pledges. New members were introduced at the Departmental Honors Banquet held April 13, 1989. Othe 1989-90 officers: Steve Wester, vice president; David Watson, secretary; Jennifer Ragland, treasurer; Robert Moreland, corresponding secretary/faculty sponsor.

Texas Eta — Hardin-Simmons University, Abilene
Chapter President - Randal Schwindt
13 actives, 5 initiates

Texas Eta held its fifteenth annual induction banquet March 10, 1989. Dale Garner, Tina E. Hill, and Corina Treece from Abilene, David Daniel from Sweetwater, Texas, and Steven Lindberg from Mission, Texas were inducted, bringing membership in the local chapter to 118. Leading the induction ceremonies were Randal Schwindt, president; Stephen Cody, vice president; Ricky Davis, secretary; and Russell Perkins, treasurer. Dr. Bo Green, Professor of Mathematics at Abilene Christian University, addressed the local chapter on the subject, "The New HP28S - Implications for Calculators in the Mathematics Classroom." Other 1989-90 officers: Stephen Cody, vice president; Tina Hill, secretary/treasurer; Mary Wagner, corresponding secretary; Edwin Hewett and Charles Robinson, faculty sponsors.

Virginia Alpha — Virginia State University, Petersburg
Chapter President - Joi L. Tyler
25 actives, 6 initiates

Two of our members, Wanda Gay and Allan P. Benglen, are Langley-Aerospace Summer Scholars during the summer 1989. Wanda Gay has received a fellowship to study at Ohio State University beginning fall, 1989, toward a M. S. degree. Wanda Gay presented a paper on Fractals at the NTA Student Symposium on April 8, 1989, in Norfolk, Virginia. KME members of the Virginia Alpha Chapter attended

several conferences and symposiums this year. Dr. Rana Singh and Ms. Dorothy R. Stevenson attended the 14th Annual Conference of the Virginia Council of Teachers of Mathematics in Harrisonburg, VA on April 1, 1989. Wanda Gay and Joceylyn Josey attended the conference with them. Drs. Emma Smith, Rana Singh, and George W. Wimbush, along with seven mathematics majors, attended the 6th Minority Technical Student Symposium on Science and Technology sponsored by the National Technical Association, Hampton Roads Chapter and Norfolk State University on April 8 in Norfolk, Virginia. Wanda Gay and Jerome Tyler presented papers. Wanda Gay and Allan P. Benglen have been offered and have accepted an Educational Fellowhip for 10 weeks this summer at the Langley Aeronautical Research Summer Scholars Program at NASA. They will be working with a scientist doing research. The Annual Louise Stokes Hunter Scholarship Award in honor of the Founder of the Virginia Alpha Chapter was presented to Wanda Gay during Honor's Night Activities at Virginia State University in April, 1989. Other 1989-90 officers: Jacqueline N. Payton, vice president; Gerald L. Burton, secretary; Mohinder D. Tewari, Dorothy R. Stevenson, corresponding secretary; Emma B. Smith, faculty sponsor.

Virginia Gamma — Liberty University, Lynchburg

Chapter President - Lisa Barwick
30 actives, 9 initiates

Virginia Gamma spring activities included regular meetings, the induction ceremony and dinner, and a colloquium with Gene Poole, a consultant to NASA in numerical analysis and computer science. Other 1989 - 90 officers: Guy Tarnstrom, vice president; Sarah Wu, secretary; Mary Beth Grayson, treasurer; Glyn Wooldridge, corresponding secretary; Robert Chasnov, faculty sponsor.

Wisconsin Alpha — Mount Mary College, Milwaukee

Chapter President - Maureen Pastors
5 actives, 5 initiates

Three students, Maureen Pastors, Cyndi Heim, and Lauri Malisch, accompanied by Sister Adrienne Eickman, attended the biennial convention in Topeka, Kansas, April 6-9, 1989. Other 1989-90 officers: Julie Elver, vice president/treasurer; Maureen Pastors, secretary; Sister Adrienne Eickman, corresponding secretary/faculty sponsor.

Wisconsin Gamma — University of Wisconsin, Eau Claire

Chapter President - Renee Wagner
36 actives, 4 initiates

The chapter had a successful spring semester which began with the initiation of four new members. Monthly meetings were highlighted with student speakers. The chapter president and corresponding secretary attended the national convention. Yearly activities concluded with a spring picnic. Other 1989-90 officers: Debra Strauch, vice president; Emily Larson, secretary; Leanne Johnson, treasurer; Tom Wineinger, corresponding secretary.

Thank You Hewlett-Packard!

Hewlett-Packard donated five HP-28S calculators for use as awards for the student paper winners and for the banquet door prize at the KME Twenty-Seventh Biennial Convention held at Washburn University in Topeka, Kansas.

Shown above are the four lucky winners with their calculators, prize checks and certificates (left to right: Allen, Chartier, Paulsen and Bly) flanked by (far left) National President Harold L. Thomas and (far right) Past President James L. Smith. The banquet "door prize" calculator was won by Robin Welch (not shown) of Missouri Alpha (Southwest Missouri State University) who gave the closest answer to the question *Give the 402nd through 405th digits in the decimal expansion of* π (answer: 3057). The "tie breaker" question *Give the value of x in the expression* $2000! = 3.3 \cdot 10^x$ (answer: 5735) was not needed.

Report on the 27th Biennial Convention

The Twenty-Seventh Biennial Convention of Kappa Mu Epsilon was held April 6-8, 1989 on the campus of Washburn University, Topeka, Kansas, with Kansas Delta the host chapter.

On Thursday evening, April 6, registration was held in the lobby of the Petro Health Center. This was followed by a mixer for delegates in the gymnasium of the Petro Center. Entertainment consisting of a magic show was presented to the delegates by Terry Elton, a professional magician. The National Council and the Regional Directors met in Room 212, Petro Center.

On Friday morning, April 7, registration continued in the lobby of the Henderson Learning Center. The first general session was held in Room 100, Henderson Center commencing at 8:30 a.m. with James L. Smith of Ohio Zeta, National President, presiding. Dr. Robert L. Burns, President of Washburn University gave an address of welcome and Harold L. Thomas of Kansas Alpha, National President-Elect responded for the Society. Larry La Mee, President of Kansas Delta, presented a greeting to the delegates.

A roll call of the chapters was made by Robert L. Bailey of New York Eta, National Secretary. Thirty chapters and about 225 members were in attendance. Travel vouchers were filed and delegate voting cards were issued. The following new chapters installed during the 1987-89 biennium were recognized: Texas Iota at McMurry College, installed on April 25, 1987; Pennsylvania Nu at Ursinus College, installed April 28, 1987; Virginia Gamma at Liberty University, installed April 30, 1987; New York Mu at St. Thomas Aquinas College, installed May 14, 1987; and Ohio Eta at Ohio Northern University, installed December 15, 1987. It was announced that New York Theta at St. Francis College was declared inactive as of July 28, 1987.

Homer Hampton of Missouri Beta, chair of the Nominating Committee, reported for the Committee which nominated Patrick Costello of Kentucky Alpha and Arnold Hammel of Michigan Beta for the office of President-Elect. Eddy Brackin of Alabama Beta and Mary Elick of Missouri Iota were selected for the office of National Historian. The nominees were introduced to the delegates and additional nominations were requested from the floor. There being none, nominations were closed.

The Problem Editor of *The Pentagon*, Ken Wilke of Kansas Delta,

was introduced to the delegates. During the morning coffee break, the Awards Committee met in Henderson 109.

Harold L. Thomas of Kansas Alpha, National President-Elect, presided during the presentation of the following student papers:

1) *Application of Number Theory: Cryptosystems*
MALA RENGANATHAN, Kansas Alpha
Pittsburg State University

2) *Infiniteness of the Minimal Forbidden Subgraph List for Bipartite Graphs with Coboxicity Less Then or Equal Two*
ROBERT CARL ROSSOW, Connecticut Beta
Eastern Connecticut State University

3) *Underwater Mathematical Modeling*
SUSAN PAULSON, Missouri Iota
Missouri Southern State College

4) *The Probabilities of a Crap Game*
MICHAEL R. ALLEN, Tennessee Alpha
Tennessee Technological University

5) *Address Sort: A Flexible and Linear Sort*
WALEED SIDDIQUI, Kentucky Alpha
Eastern Kentucky University

At 11:50 a.m., a group picture was taken outside Henderson Center. Convention committees met during lunch.

The convention reconvened at 1:30 p.m. in Henderson 100. Harold L. Thomas of Kansas Alpha, National President-Elect, presided during the presentation of the following student papers:

6) *A Multi-Dimensional Study of the Divergence Theorem*
KEVIN O'REILLY, New York Lambda
C. W. Post Center of Long Island University

7) *The Rain, I Claim, Falls Mainly on the Brain*
KEVIN K. CHARTIER, Kansas Delta
Washburn University

8) *Bootstrapping in Principal Component Analysis*
JOSEPH GREGORIO, Connecticut Beta

Eastern Connecticut State University

At 2:45 p.m., a student section met in Henderson 100 with Larry La Mee, President of Kansas Delta, presiding. A faculty section met in Henderson 107 with James L. Smith of Ohio Zeta, National President, presiding.

At 3:45 p.m., the convention reconvened for the presentation of papers with Harold L. Thomas of Kansas Alpha, National President-Elect, presiding. The following papers were presented:

9) *A Piece of π*
SCOTT STEUBING, Missouri Kappa
Drury College

10) *Numerical Integration*
JULIE HOLDORF, Iowa Alpha
University of Northern Iowa

11) *Pattern Duplication and Reflection: A Bouncing Ball Problem*
LEE CHASEN, Pennsylvania Lambda
Bloomsburg University

At 5:00 p.m., the National Council met in Henderson Center.

At 6:30 p.m., the convention banquet was held in the Washburn Room of Memorial Union with Ron Wasserstein as master of ceremonies. Gaylord Ukena presented piano selections during dinner and accompanied Ann Ukena in a humorous skit. The keynote address was given by Solomon Garfunkel, Executive Director for the Consortium for Mathematics and its Applications.

On Saturday, April 8, the Regional Directors met for breakfast at the Holiday Inn at 7:15 a.m. The convention reconvened at 8:30 a.m. in Henderson 100. Harold L. Thomas of Kansas Alpha, National President-Elect, presided during the presentation of the following student papers:

12) *Abracadabra! Pascal's Triangle*
GINA D. DOLICK, Ohio Zeta
Muskingum College

13) *Fun with Planes*
JOHN DAY, Missouri Iota
Missouri Southern State College

14) *Can You Hear the Shape of a Tambourine?*
THERESA BLY, California Gamma
California Polytechnic State University

15) *Axiomatic Structure of the Integral*
SHERRI L. RENEGAR, Missouri Alpha
Southwest Missouri State University

The Awards Committee met in Henderson 109 at 10:00 a.m.

The second business meeting was held at 10:15 a.m. in Henderson 100 with James L. Smith of Ohio Zeta, National President, presiding.

The following national officers presented reports (copies attached):

Business Manager, *The Pentagon* - Gerald White, Illinois Eta
Editor, *The Pentagon* - Kent Harris, Illinois Eta
National Treasurer - Sister Jo Ann Fellin, Kansas Gamma
National Secretary - Robert L. Bailey, New York Eta
National Historian - read by Harold L. Thomas, Kansas Alpha in the absence of M. Michael Awad, Missouri Alpha, National Historian
National President-Elect - Harold L. Thomas, Kansas Alpha
National President - James L. Smith, Ohio Zeta

The election of a National President-Elect and a National Historian was conducted by James L. Smith of Ohio Zeta, National President.

Patrick Costello of Kentucky Alpha, chairperson of the Auditing Committee reported that the National Treasurer's records were found to be accurate.

Larry La Mee of Kansas Delta reported for the student section meeting, while Mary Sue Beersman of Missouri Eta reported for the faculty section meeting. As a result of the student report, the delegates adopted the following resolution:

> "Resolved that the National Council investigate a revision in the paper awards selection procedure at biennial conventions. This procedure would allow students to have input into the selection of the best papers, via one vote per chapter on the top four papers. This vote would then be used by the Awards Committee as part of their selection procedure."

An invitation to host the Twenty-Eight Biennial Convention in 1991

was extended by Alabama Beta, University of North Alabama.

George R. Mach of California Gamma, former National Secretary, addressed the delegates with a few remarks concerning past KME activities, the involvement of present KME members in future activities and how these goings-on relate to the George R. Mach Distinguished Service Award. Harold L. Thomas of Kansas Alpha, National President-Elect, explained the criteria for the selection of the George R. Mach Distinguished Service Award which is given each biennium to a person who has made major contributions to Kappa Mu Epsilon. This biennium's recipient is Fred W. Lott, the citation for whom reads as follows:

CITATION FOR FRED W. LOTT
THE GEORGE R. MACH DISTINGUISHED SERVICE AWARD
APRIL 8, 1989

> Dr. Lott began his service to Kappa Mu Epsilon in 1951 when he became Faculty Sponsor and Corresponding Secretary of Iowa Alpha Chapter. In 1959 he became Editor of *The Pentagon* for six years and then served as National Vice President for two years. Fred was National President from 1966-1969 and then served four additional years on the National Council of KME as National Past President. It was during Dr. Lott's term as National President that planning and execution of the necessary changes to make KME eligible for membership in the Association of College Honor Societies took place. Kappa Mu Epsilon was accepted as a member Honor Society of ACHS in 1968. Over the years, Dr. Lott's enthusiasm and careful attention to detail, his consideration of others, and his wise counsel have added greatly to the status of Kappa Mu Epsilon. Since retiring from active university service in 1984, Fred and his wife Kathryn have continued their active support of Iowa Alpha Chapter in Cedar Falls. We take pleasure in recognizing his twenty-two years of service to Kappa Mu Epsilon by presenting to him the George R. Mach Distinguished Service Award.

An award of $100 will be given to Iowa Alpha, the chapter with which Fred Lott was associated for so many years.

Mary Elick of Missouri Iota, Chair of the Resolutions Committee, reported for the Committee. The following resolutions were adopted:

Whereas Kappa Mu Epsilon has been holding its 27th Biennial Convention on the beautiful campus of Washburn University and whereas the convention has been both an enjoyable and profitable experience for all of us, be it resolved that we express appreciation -

1) To the host chapter, Kansas Delta, its president Larry La Mee, its corresponding secretary,Robert Thompson, its faculty sponsors, Al Riveland and Ron Wasserstein, and to the administration of Washburn University, for their gracious hospitality and efficient organization which have been so important to the success of this convention.

2) To each of the National Officers of Kappa Mu Epsilon for the many hours of service they have contributed in preparation for and during the convention.

3) To Terry Elton who entertained us with his magic show and to Solomon Garfunkel for his challenging banquet address.

4) To the various committees who worked so diligently both before and during this convention to insure its success,

5) Last, but not least, to the fifteen students who prepared and presented papers at this convention and to the two students whose papers were chosen as alternates.

Arnold Hammel of Michigan Beta, Chair of the Awards Committee, reported for the committee. Certificates of participation were presented to all 15 student speakers. The following student paper awards were announced and presented:

First Place ($60) - Kevin K. Chartier, Kansas Delta
Second Place ($40) - Michael R. Allen, Tennessee Alpha
Third Place (30) - Susan Paulson, Missouri Iota
Fourth Place ($20) - Theresa Bly, California Gamma

In addition, each of the above winners also received an HP-28S calculator, courtesy of the Hewlett-Packard Company.

The election results were announced. The following officers were elected for the next four years, 1989-1993, and they were installed by

James L. Smith of Ohio Zeta, retiring president:

National President - Harold L. Thomas, Kansas Alpha
National President-Elect - Arnold D. Hammel, Michigan Beta
National Historian - Mary S. Elick, Missouri Iota

An award in the form of a plaque was presented by Harold L. Thomas of Kansas Alpha, National President, to James L. Smith of Ohio Zeta for his service to Kappa Mu Epsilon over the past 8 years.

Convention evaluation forms were distributed to the delegates and collected by the host chapter. Copies of the reports of all the national officers were made available to the delegates.

Travel allowances were paid to the delegates by Sister Jo Ann Fellin of Kansas Gamma, National Treasurer. The convention was adjourned at 11:45 a.m.

The National Council had a luncheon meeting at the Holiday Inn at 12:00 noon.

Robert L. Bailey

Report of the President

During my second biennium as your National President, we have initiated five new chapters, and moved NY THETA to inactive status, making the total number of 103 active chapters. Added to the active chapter list are (alphabetically by state): NY MU, St. Thomas Aquinas College (installed by Adelaide Harmon-Elliott, 14May87); OH ETA, Ohio Northern Univ. (installed by James L. Smith, 15Dec87); PA NU, Ursinus College (installed by James E. Lightner, 28Apr87); TX IOTA, McMurry College (installed by Wayne F. Hayes, 25Apr87); and VA GAMMA, Liberty University (installed by James E. Lightner, 30Apr87). The current strength and vitality of our chapters is most encouraging. However, now is no time to rest on our laurels. Each one of you can help by suggesting to your friends at other schools the benefits of Kappa Mu Epsilon membership.

The National Officers continue to support the regional organization. Please refer to the report by President-Elect Harold L. Thomas for the report of regional conventions. With much gratitude we recognize the steady work of our three Regional Directors whose terms expire with this convention: Region I, James C. Pomfret, PA LAMBDA (Bloomsburg Univ.); Region III, Thomas J. Sharp, GA ALPHA (West Georgia

College); and Region V, Wayne F. Hayes, OK GAMMA (Southwestern Oklahoma State Univ.). These people have served our Society well and deserve the thanks of each of us. The appointment of the next class of Regional Directors for Regions I, III and V will be made shortly after this convention. Arnold Hammel, MI BETA (Central Michigan Univ.); Homer Hampton, MO BETA (Central Missouri State Univ.); and Raymond Terry, CA GAMMA (Calif. Polytechnic State Univ.) continue to serve as Directors of Regions II, IV and VI, respectively.

Almost without exception, everyone who was asked to serve on a convention committee willingly agreed to do so. This kind of response, both at convention time and throughout my tenure, has made the privilege of being your President much easier. A special thanks is extended by all of us to each of the corresponding secretaries and faculty members who encouraged and assisted your students in the preparation of the excellent papers we have on the convention program this year. Even more so, we all express our gratitude to each of the students who did the work, endured the stress, and prevailed in the submitting and presenting of your papers to this convention. Without the student papers, the major focal point of the convention does not exist. Thank you to each!! We are further indebted to the diligent and super people who did all of the committee work necessary to bring this convention to fruition, and to staff the committees at the convention. To all of you at Kansas DELTA (organized by Allan Riveland and Ronald Wasserstein), and to each convention committee member, please accept our most sincere thanks for jobs well done.

During the past biennium, I have continued to be active on your behalf in the affairs of the Association of College Honor Societies (ACHS). At the ACHS meeting in February, 1988, I was a panel discussion member, and for this past year I have been chairperson of the Long Range Planning Committee of ACHS. President-Elect Harold L. Thomas attended the 1989 meeting with me, is already assigned to an ACHS Committee, and has been involved in his imminent transition to being our next KME President. We continue to have ideas for the possible improvement of Kappa Mu Epsilon which are stimulated by ACHS attendance. Some of these include: establish computerized membership files; Regional Directors as members of the National Council; fellowship/scholarship programs; endowed fund; correspond with members annually; establish national office; catastrophe and other insurance for officers; continue active participation in ACHS; use list of chapter officers w/addresses and communicate with students directly; and, work with other ACHS Honor Societies on local campus towards strengthening of all honor societies.

As a statement of fact, we all recognize the fantastic job which is being done by those who work with, manage, write for, and produce our publication, *The Pentagon*. We are most appreciative of the editorial leadership of Kent Harris, IL ETA, and the sound business management given to us by Gerald White, IL ETA (Western Illinois Univ.). We thank these two, and all the people staffing the low profile jobs who truly give us a journal which is respected nationwide by our professional mathematics community. Both Kent and Gerald have requested to be replaced. This process is currently under consideration by the National Council.

Finally, we are having a transition in National officers at this meeting as Harold L. Thomas becomes National President. As we elect a National President-Elect and a National Historian, we have a special indebtedness to the very capable and conscientious persons who permitted themselves to be nominated for positions of national leadership. Be assured that whoever is elected, Kappa Mu Epsilon will continue in strength because of the elections. Dr. M. Michael Awad, our out-going National Historian, has done a superb job! Evidence of his diligent work is published in every issue of *The Pentagon*. Mike, thanks tons!!

For me, I honestly can say that I have thoroughly enjoyed the privilege of serving as your President-Elect and as your President. The eight year commitment seemed awesome at first, but has proved quite manageable, during a sabbatical leave year, and all. In summary, let me say that you folks and persons like you have made my responsibilities pleasurable ones. This fact is a direct reflection of the continuous help and support which I have had from every one of you. Thanks so very much!! Best wishes to each of you as we continue to work for the improvement of this very special Honor Society -- Kappa Mu Epsilon.

James L. Smith

Report of the President-Elect

One of the responsibilities of the President-Elect is to serve as coordinator of regional activities of the Society through the regional directors. During the spring of 1988, there were four regional conventions held in:

Region II at Illinois Delta, College of St. Francis,
March 18-19, Arnold Hammel, Regional Director.

Region III at Kentucky Alpha, Eastern Kentucky Univ.,
March 24-25, Thomas J. Sharp, Regional Director.

Region IV at Kansas Alpha, Pittsburg State University,
March 25-26, Homer Hampton, Regional Director.

Region IV at Iowa Alpha, University of Northern Iowa,
April 22-23, Homer Hampton, Regional Director.

This is the first time that a regional convention has been held in Region III. Two conventions were again held in Region IV because of travel distances involved. Programs at the regional conventions included student papers, guest talks, and good social times. We extend our sincere thanks to the host chapters, regional directors, and all who participated in this regional activity. We also appreciate the efforts of the other Regional Directors, James Pomfret, Region I; Wayne Hayes, Region V; and Raymond Terry, Region VI; in attempting to have regional conventions in their region.

It is another of the President-Elect's responsibilities to make arrangements for the presentation of student papers at the National Convention. I am pleased to report that seventeen students, representing thirteen chapters and ten states, submitted papers for this convention. All of these papers were written by undergraduate students. Fifteen of the papers are being presented at this convention. On behalf of our entire Society, I want to extend special thanks to the members of the Paper Selection Committee who read and ranked the papers: Professor Charles Allen (Missouri Kappa), Sister Adrienne Eickman (Wisconsin Alpha), and Professor Patricia Roden (Alabama Beta). In addition, I want to express our sincere thanks to the seventeen students who prepared and submitted papers. It is these papers and the work of the Selection Committee which are the most important components in having a successful convention.

Harold L. Thomas

Report of the National Secretary

During the last biennium five new chapters of Kappa Mu Epsilon were installed. The chapters and installation dates are as follows: Texas Iota at McMurry College, April 25, 1987; Pennsylvania Nu at Ursinus College, April 28, 1987; Virginia Gamma at Liberty University, April 30, 1987; New York Mu at St. Thomas Aquinas College, May 14, 1987; Ohio

Eta at Ohio Northern University, December 15, 1987. On July 28, 1987 the New York Theta Chapter at St. Francis College was declared inactive. The Society now has 103 active chapters in 30 states.

During the last biennium 2,556 members were initiated. The 103 active chapters have a combined membership of 45,559 and the 29 inactive chapters have a combined membership of 6,390, making the total membership of Kappa Mu Epsilon 51,949 at the end of the biennium.

As National Secretary, I maintain permanent files on all active and inactive chapters, including reports of all initiations. I order membership certificates for all new members and I stock all supplies, including forms, invitations, and jewelry. I assist corresponding secretaries in any ways that I can and I take minutes of National Council meetings and Biennial Conventions.

Robert L. Bailey

Financial Report of the National Treasurer
1987-1989 Biennium
March 11, 1987 through March 13, 1989

1. Cash on hand, beginning of biennium			$ 47378.50
RECEIPTS			
2. Receipts from Chapters			
Initiates (2570)		38550.00	
Jewelry		1800.50	
Supplies		257.85	
3. Interest		4996.12	
4. Miscellaneous		1092.39	
Overpays	140.95		
Convention reimbursement	203.52		
Insufficient funds reimb	120.00		
New Chapter Fees	615.42		
Certificate replacements	12.50		
5. Total Receipts		46696.86	
6. Total Receipts plus Cash on Hand			94075.36
EXPENTITURES			
7. Jewelry		1827.97	
8. Printing		8271.15	
9. Pentagon (5 issues)		8783.50	

10. Travel		3091.31	
11. Conventions		15912.83	
1987 Biennial Convention	15205.83		
1988 Regional Meetings	707.00		
12. ACHS dues		120.00	
13. Miscellaneous		3060.52	
National Council Meetings	300.53		
ACHS Meetings	160.00		
Supplies	381.61		
Telephone	100.42		
Postage/shipping	1230.66		
Chapter installations	167.30		
Non-convention awards	300.00		
Insufficient funds	150.00		
Refund overpays	270.00		
14. Total Expenditures		41067.28	
15. Cash on Hand, end of biennium			53008.08

Proof of cash:

Shawnee Federal #0617008418	25000.00
Shawnee Federal #0640003303	1071.53
Exchange Natl Bank #356896	26936.55

Jo Ann Fellin, OSB

Report of the National Historian

The files of the National Historian are being maintained and continually updated with the reports received from chapters about their events and activities; with information received from Regional Directors about regional conventions and items of interest related to the region; and with material received from the National Officers, which has historical significance.

News items have been solicited from corresponding secretaries semi-annually, in January and May. The responses are then edited for publication in the Chapter News section of *The Pentagon.*

During the past biennium, 87 of the active chapters responded at least once to the chapter news request. Special mention goes to the following 25 chapters for their cooperation in responding to all four inquires: CA Gamma, CO Gamma, IL Zeta, IN Alpha, IA Alpha, KS Alpha, KS Gamma, KS Delta, KS Epsilon, KY ALpha, MD Delta, MO

Alpha, MO Beta, MO Gamma, MO Epsilon, NE Alpha, NE Gamma, OH Zeta, PA Beta, PA Delta, PA Zeta, PA Kappa, TX Eta, WI Alpha, WI Beta. I urge chapters to reply to the requests for chapter news even if it is only to identify chapter officers. This will provide chapters with a permanent record of their local officers in the event they do not retain that information within their own chapter.

I want to extend thanks to all with whom I have corresponded relative to this office - the National Officers, the Regional Directors, the Editor of *The Pentagon*, Corresponding Secretaries, and individual KME members. It has been a pleasure to serve as your historian for the past four years.

M. Michael Awad

Report of the Editor of *The Pentagon*

Since the last national convention, eleven student papers and four faculty papers have been published in *The Pentagon*. The student papers were submitted through the national meeting (no regional meeting papers were submitted), and the faculty papers were submitted to the editor, to James Calhoun, who edits the Cursor section, or to Iraj Kalantari, who edits the Hexagon section.

In the past six months the number of faculty papers submitted for possible publication in *The Pentagon* has increased significantly; including papers from Chile, Columbia, France and Mexico. Your material for the two sections mentioned above as well as material for the Problem Corner is always welcome.

I count the opportunity of working as editor of *The Pentagon* during the last ten years as a privilege, and it has been reassuring in these times to see the dedication of students and faculty to the ideals of KME. I especially value the many friendships formed through my work in KME.

Kent Harris

Report of the Business Manager of *The Pentagon*

It is with pleasure that I make my second report as Business Manager at this 27th Biennial Convention.

My primary responsibilities are to arrange for printing of *The Pentagon* and to see that copies are mailed out to members of Kappa Mu Epsilon for the two initial years of membership and to those who wish to

continue subscriptions. The goal is to have issues mailed in December and May of each academic year. During this past biennium, the mailings averaged 2800 copies. The mailing list includes subscribers in forty-three states and twenty-six foreign countries. States receiving the largest number of copies are, in descending order, Pennsylvania, Missouri, Illinois and Ohio.

By continuing to make use of the printing services on the campus of Western Illinois University it has been possible to keep average publishing costs to less than $0.63 per copy. Turn around time on campus has improved since the 1985-87 biennium but has remained as a slight problem as this type of work is given lowest priority. If the spring mailing is delayed until after May it becomes necessary to spend several dollars to forward the copies from school addresses to home addresses. After each mailing, about eighty copies are returned by the US Postal Service as undeliverable due to incorrect address or lack of forwarding address. This return procedure costs over $3.00 per copy. Please inform your chapter members that it is important that they provide us at *The Pentagon* with a current address. If it is convenient, a new member could indicate a home address rather than a school address since a school address is more likely to be changed. Any subscriber that does not receive their copy should contact the Business Manager.

Complementary copies of *The Pentagon* are sent to the library of each college or university with an active chapter of Kappa Mu Epsilon. Anyone contributing an article for an issue will receive a free copy. Speakers at this 27th Biennial Convention will have their subscriptions extended for two years.

I would like to thank Kent Harris, Editor of *The Pentagon*, who is always helpful; James L. Smith, President; Robert Bailey, Secretary; and Sister Jo Ann Fellin, Treasurer, whose cooperation have made things move smoothly. The Mathematics Department at Western Illinois University has also been supportive and I would like to thank Debra Vorderer and Teri Woodworth, student assistants, who have done a great job of keeping everyday details so well organized.

Gerald White

Kappa Mu Epsilon Twenty-Seventh Biennial Convention, 6-8 April 1989
at Washburn University, Topeka, Kansas.

Kappa Mu Epsilon National Officers

Harold L. Thomas *President*
Department of Mathematics
Pittsburg State University, Pittsburg, Kansas 66762

Arnold D. Hammel *President-Elect*
Department of Mathematics
Central Michigan University, Mt. Pleasant, Michigan 48859

Robert L. Bailey *Secretary*
Department of Mathematics
Niagara University, Niagara University, New York 14109

Jo Ann Fellin *Treasurer*
Mathematics and Computer Science Department
Benedictine College, Atchison, Kansas 66002

Mary S. Elick *Historian*
Department of Mathematics
Missouri Southern State College, Joplin, Missouri 64801

Kappa Mu Epsilon, Mathematics Honor Society, was founded in 1931. The object of the Society is fivefold: to further the interests of mathematics in those schools which place their primary emphasis on the undergraduate program; to help the undergraduate realize the important role that mathematics has played in the development of western civilization; to develop an appreciation of the power and beauty possessed by mathematics due to its demands for logical and rigorous modes of thought; to provide a Society for the recognition of outstanding achievement in the study of mathematics at the undergraduate level; and to disseminate the knowledge of mathematics and familiarize the members with the advances being made in mathematics. The official journal of the Society, *The Pentagon*, is designed to assist in achieving these objectives as well as to aid in establishing fraternal ties between the Chapters.

Active Chapters of Kappa Mu Epsilon

Listed by date of installation.

Chapter	Location	Installation Date
OK Alpha	Northeastern Oklahoma State University, Tahlequah	18 April 1931
IA Alpha	University of Northern Iowa, Cedar Falls	27 May 1931
KS Alpha	Pittsburg State University, Pittsburg	30 Jan 1932
MO Alpha	Southwest Missouri State University, Springfield	20 May 1932
MS Alpha	Mississippi University for Women, Columbus	30 May 1932
MS Beta	Mississippi State University, State College	14 Dec 1932
NE Alpha	Wayne State College, Wayne	17 Jan 1933
KS Beta	Emporia Kansas State College, Emporia	12 May 1934
NM Alpha	University of New Mexico, Albuquerque	28 March 1935
IL Beta	Eastern Illinois University, Charleston	11 April 1935
AL Beta	University of North Alabama, Florence	20 May 1935
AL Gamma	University of Montevallo, Montevallo	24 April 1937
OH Alpha	Bowling Green State University, Bowling Green	24 April 1937
MI Alpha	Albion College, Albion	29 May 1937
MO Beta	Central Missouri State University, Warrensburg	10 June 1938
TX Alpha	Texas Tech University, Lubbock	10 May 1940
TX Beta	Southern Methodist University, Dallas	15 May 1940
KS Gamma	Benedictine College, Atchison	26 May 1940
IA Beta	Drake University, Des Moines	27 May 1940
TN Alpha	Tennessee Technological University, Cookeville	5 June 1941
NY Alpha	Hofstra University, Hempstead	4 April 1942
MI Beta	Central Michigan University, Mount Pleasant	25 April 1942
NJ Beta	Montclair State College, Upper Montclair	21 April 1944
IL Delta	College of St. Francis, Joliet	21 May 1945
KS Delta	Washburn University, Topeka	29 March 1947
MO Gamma	William Jewell College, Liberty	7 May 1947
TX Gamma	Texas Woman's University, Denton	7 May 1947
WI Alpha	Mount Mary College, Milwaukee	11 May 1947
OH Gamma	Baldwin-Wallace College, Berea	6 June 1947
CO Alpha	Colorado State University, Fort Collins	16 May 1948
MO Epsilon	Central Methodist College, Fayette	18 May 1949
MS Gamma	University of Southern Mississippi, Hattiesburg	21 May 1949
IN Alpha	Manchester College, North Manchester	16 May 1950
PA Alpha	Westminster College, New Wilmington	17 May 1950

IN Beta	Butler University, Indianapolis	16 May 1952
KS Epsilon	Fort Hays State University, Hays	6 Dec 1952
PA Beta	LaSalle College, Philadelphia	19 May 1953
VA Alpha	Virginia State College, Petersburg	29 Jan 1955
IN Gamma	Anderson College, Anderson	5 April 1957
CA Gamma	California Polytechnic State University, San Luis Obispo	23 May 1958
TN Beta	East Tennessee State University, Johnson City	22 May 1959
PA Gamma	Waynesburg College, Waynesburg	23 May 1959
VA Beta	Radford College, Radford	12 Nov 1959
NE Beta	Kearney State College, Kearney	11 Dec 1959
IN Delta	University of Evansville, Evansville	27 May 1960
OH Epsilon	Marietta College, Marietta	29 Oct 1960
MO Zeta	The University of Missouri - Rolla, Rolla	19 May 1961
NE Gamma	Chadron State College, Chadron	19 May 1962
MD Alpha	College of Notre Dame of Maryland, Baltimore	22 May 1963
IL Epsilon	North Park College, Chicago	22 May 1963
OK Beta	University of Tulsa, Tulsa	3 May 1964
CA Delta	California State Polytechnic University, Pomona	5 Nov 1964
PA Delta	Marywood College, Scranton	8 Nov 1964
PA Epsilon	Kutztown State College, Kutztown	3 April 1965
AL Epsilon	Huntington College, Montgomery	15 April 1965
PA Zeta	Indiana University of Pennsylvania, Indiana	6 May 1965
AR Alpha	Arkansas State University, State College	21 May 1965
TN Gamma	Union University, Jackson	24 May 1965
WI Beta	University of Wisconsin - River Falls, River Falls	25 May 1965
IA Gamma	Morningside College, Sioux City	25 May 1965
MD Beta	Western Maryland College, Westminster	30 May 1965
IL Zeta	Rosary College, River Forest	26 Feb 1967
SC Beta	South Carolina State College, Orangeburg	6 May 1967
PA Eta	Grove City College, Grove City	13 May 1967
NY Eta	Niagara University, Niagara	18 May 1968
MA Alpha	Assumption College, Worcester	19 Nov 1968
MO Eta	Northeast Missouri State University, Kirksville	7 Dec 1968
IL Eta	Western Illinois University, Macomb	9 May 1969
OH Zeta	Muskingum College, New Concord	17 May 1969
PA Theta	Susquehanna University, Selinsgrove	26 May 1969
PA Iota	Shippensburg State College, Shippensburg	1 Nov 1969
MS Delta	William Carey College, Hattiesburg	17 Dec 1970
MO Theta	Evangel College, Springfield	12 Jan 1971
PA Kappa	Holy Family College, Philadelphia	23 Jan 1971
CO Beta	Colorado School of Mines, Golden	4 March 1971
KY Alpha	Eastern Kentucky University, Richmond	27 March 1971

TN Delta	Carson-Neuman College, Jefferson City	15 May 1971
NY Iota	Wagner College, Staten Island	19 May 1971
SC Gamma	Winthrop College, Rock Hill	3 Nov 1972
IA Delta	Wartburg College, Waverly	6 April 1973
PA Lambda	Bloomsburg State College, Bloomsburg	17 Oct 1973
OK Gamma	Southwestern Oklahoma State University, Weatherford	1 May 1973
NY Kappa	Pace University, New York	24 April 1974
TX Eta	Hardin-Simmons University, Abilene	3 May 1975
MO Iota	Missouri Southern State College, Joplin	8 May 1975
GA Alpha	West Georgia College, Carrollton	21 May 1975
WV Alpha	Bethany College, Bethany	21 May 1975
FL Beta	Florida Southern College, Lakeland	31 Oct 1976
WI Gamma	University of Wisconsin - Eau Clair, Eau Claire	4 Feb 1978
MD Delta	Frostburg State College, Frostburg	17 Sept 1978
IL Theta	Illinois Benedictine College, Lisle	18 May 1979
PA Mu	St. Francis College, Loretto	14 Sept 1979
AL Zeta	Birmingham Southern College, Brimingham	18 Feb 1981
CT Beta	Eastern Connecticut State College, Willimantio	2 May 1981
NY Lambda	C. W. Post Center of Long Island University, Brookville	2 May 1983
MO Kappa	Drury College, Springfield	30 Nov 1984
CO Gamma	Fort Lewis College, Durango	29 March 1985
NE Delta	Nebraska Wesleyan University, Lincoln	18 April 1986
TX Iota	McMurry College, Abilene	25 April 1987
PA Nu	Ursinus College, Collegeville	28 April 1987
VA Gamma	Liberty University, Lynchburg	30 April 1987
NY Mu	St. Thomas Acquinas College, Sparkill	14 May 1987
OH Eta	Ohio Northern University, Ada	15 Dec 1987

The Pentagon is prepared with the assistance of the Instructional Media Center at Long Island University.